EN

Assembly Instructions

Control CS 320 FU

1. Contents

1. Contents 2
2. Information in this document 3
3. General safety instructions 3
4. Product overview 4
4.1 Product description 4
4.2 Variants 4
4.3 Motherboard CS 320 FU 5
4.4 Version CS 320 FU-I Frequency converter incorporated in drive, CS 320 control in separate housing 6
4.5 Version CS 320 FU-E Frequency converter and CS 320 control together in one housing 6
4.6 Connection of Siemens V20-A / V20-AA frequency converter 8
4.7 Connection of Siemens V20 frequency converter 8
5. Installation 9
5.1 Safety instructions for installation 9
5.2 Mains connection 9
5.3 Internal fuse protection 11
5.4 Mains voltage selection 11
5.5 Supply to external devices (only with 400 V / 3-phase connection) . . . 12
5.6 Connection of electronic limit position system absolute value encoder (AWG) 12
5.7 Mechanical limit switch (MEC) connection. 13
5.8 Connection of command devices 15
5.9 Light grid connection 17
5.10 Connection of closing edge protective device 1 18
5.11 Connection light barrier 1 19
5.12 Terminal assignment, relay outputs 20
5.13 Connection of programmable inputs 20
5.14 Safety input per EN 12453 23
5.15 Radio receiver, pluggable 24
5.16 CS radio 25
5.17 Digital 991 25
5.18 Connection of external radio receiver 26
5.19 Connection of frequency converter 26
5.20 Connection of LCD monitor 27
5.21 Connection of MS BUS components 27
5.22 Transmission system radio 28
6. Initialisation 28
7. Setting the limit positions 29
7.1 Checking the drive / travel direction 29
7.2 Setting the mechanical limit switches 29
7.3 Setting the electronic end position system using the setting buttons on the circuit board 29
7.4 Setting the electronic limit position system via the LCD monitor 30
7.5 Setting the intermediate positions of the electronic limit position system via the LCD monitor 30
8. Programming 31
8.1 Overview of the LCD monitor 31
8.2 LCD monitor operating modes 31
8.3 Expert menu 32
8.4 RESET 32
8.5 RESETTING the controller with LCD monitor 33
8.6 RESETTING the controller without LCD monitor 33
8.7 RESET the frequency inverter settings 33
9. Frequency converter 34
9.1 General 34
9.2 Adjustable values 34
9.3 Travel diagrams 36
9.4 Rated values for motor 37
10. Navigator (only LCD monitor) 38
11. Functional overviews 40
11.1 Automatic mode 40
11.2 Input operating mode 41
11.3 Explanations of the relay modes: 51
11.4 Explanations of the inputs: 54
11.5 Diagnosis operating mode / error memory . 58
12. Fault display and remedial measures 61
12.1 Fault display on the LCD monitor 61
12.2 Error message via LED indicator 65
13. Technical data 67
13.1 Mechanical and electrical data 67
13.2 Category and performance level of the safety function per EN ISO 13849-1 68
14. Service 69
15. Manufacturer's declaration 70
16. Annex 71
16.1 Safety circuit measuring points 71
16.2 Overview of the connections 72

2. Information in this document

Original assembly Instructions

- Copyright.
- No part of these instructions may be reproduced without our prior approval.
- Subject to alterations in the interest of technical progress.
- All dimensions given in mm.
- The diagrams in this manual are not to scale.

Key to symbols

⚠ WARNING!

Indicates a hazard with a medium level of risk which, if not avoided, could result in death or serious injury.

⚠ CAUTION!

Indicates a hazard with a low level of risk which, if not avoided, could result in minor or moderate injury.

⚠ ATTENTION!

Indicates an imminent danger of damage or destruction.

☑ CHECK

Indicates a check to be performed.

ℹ REFERENCE

Reference to separate documents which must be complied with.

☞ Action request

– List, itemisation

➔ Reference to other sections of this document

3. General safety instructions

⚠ WARNING!

Failure to comply with the documentation could result in life-threatening danger!

☞ Be sure to follow all the safety instructions in this document.

Warranty

The function and safety of the equipment is only guaranteed if the warning and safety instructions included in these assembly Instructions are adhered to.
The manufacturer is not liable for personal injury or damage to property if these occur as a result of the warnings and safety advice being disregarded.
The manufacturer does not accept any liability or warranty for damage due to the use of non-approved spare parts and accessories.

Intended use

The controller CS 320 FU is designed exclusively for controlling door systems through drives with mechanical limit switches (MEC) or an electronic limit position system (AWG). The door drives must be designed for control with a frequency inverter.

Target group

Only qualified and trained electricians may connect, programme and service the control.
Qualified and trained electricians must meet the following requirements:

- Knowledge of the general and specific safety and accident prevention regulations,
- Knowledge of the relevant electrical regulations,
- Training in the use and care of appropriate safety equipment,
- Capable of recognising the dangers associated with electricity.

General safety instructions

Instructions regarding installation and connection

- The control is designed with X type terminals.
- The system must be disconnected from the electricity supply before carrying out any electrical work. It must be ensured that the electricity supply remains disconnected for the duration of the work.
- Local protective regulations must be complied with.
- Consult the manufacturer before carrying out modifications or replacing the mains connection cable.
- In general, an original wiring harness from Marantec Legden GmbH & Co. KG should be used for establishing the connection between the door drive and controller. Changes or replacements shall only take place following consultation with the manufacturer and approval by the same.

Information concerning operation

- Unauthorised persons (particularly children) should not be allowed to play with permanently installed adjusting or control devices.
- Keep remote controls beyond the reach of children.

Observe the valid standards and regulations!

4. Product overview

4.1 Product description

The controller CS 320 FU is designed for use in industrial areas and can be used with all door types in these areas. This facilitates the speed-independent control of door drives. It is possible to connect drives with mechanical limit switches (MEC) or an electronic limit position system (AWG).
All the necessary command devices and safety elements can be connected, set and evaluated.
Programming takes place via a pluggable LCD monitor. Alternatively, a service tool is available as an accessory.
The service tool consists of a stick and an app.
The following supplier variants of the controller CS 320 are possible:

4.2 Variants

Housing variants:

- Controller CS 320 FU in the "standard" housing
- Controller CS 320 FU-E in the "combination" or "maxi" housing

Variants of the pluggable LCD monitor:

- LCD monitor on the circuit board
- LCD monitor in the housing cover
- Hard-wired LCD monitor, pluggable (MS BUS)

Command device variants:

- 3-fold button CS integrated in the housing

Optional:

- Housing without 3-fold button
- Housing with ON/OFF key switch
- Housing with main switch
- Housing with emergency stop
- Pluggable components (circuit board)
  - Brake monitoring module
  - Week timer
  - Radio receiver
  - Radio transmission system for closing edge protective device and/or a safety element.

The assembly Instructions describe the connection and programming options and variants of the CS 320 controller with connected LCD monitor and from software version V1.01a.

4.3 Motherboard CS 320 FU

Explanation:

X1: Mains connection terminal strip
X2: Motor terminal strip
X3: Terminal strip for command devices
X4: Terminal strip for safety elements
X5: Terminal strip for relays
X6: Connector strip for internal ON/OFF switch
X7: Connector strip for internal 3-fold button KDT
X8: Connector strip for LCD monitor
(Beneath the LCD monitor)
X9: Connector strip for radio receiver
X10: Connector strip for week timer / brake monitoring module
X11: Connector strip for electronic limit position system (AWG)
X12: Connector strip for external radio receiver
X13: Connector strip for internal 3-fold button CS
X15: Terminal strip for mechanical limit switches (MEC)
X16: Connector strip for BUS system (MS BUS)
X17: Plug-in connector RJ for BUS system (MS BUS)
X18: Connector strip for frequency converter (interface)
X19: Terminal strip for supplying external devices 230V / 50Hz
X20: Connector strip for transmission system
X21: Mains voltage selection

H1: Ready for operation (green)
Lights up with power supply.
H2: Status indicator (red)
Lights up with faults or with actuation of the safety equipment

S1: Programming button (+)
(Beneath the LCD monitor)
S2: Programming button (–)
(Beneath the LCD monitor)
S3: Programming button (P)
(Beneath the LCD monitor)

F1: Fuse protection for external devices 230V / 50Hz (max. 1A slow-blow)
F2.1: Fuse protection for controller and drive L1 (max. 10 A)
F2.2: Fuse protection for controller and drive L2 (max. 10 A)
F2.3: Fuse protection for controller and drive L3 (max. 10 A)
⏚ Terminal strip for protective conductor (PE)

4.3 / 1

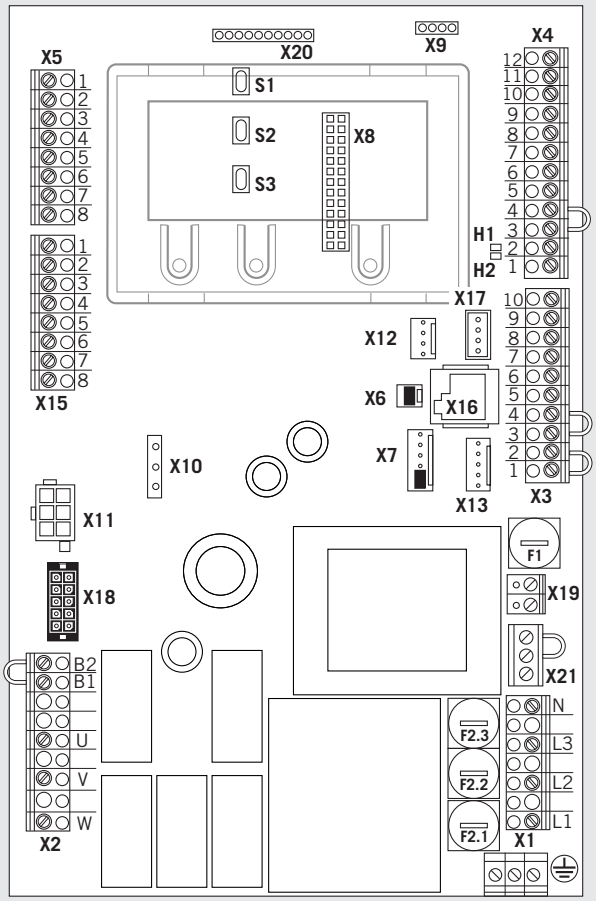

Product overview

4.4 Version CS 320 FU-I
Frequency converter incorporated in drive, CS 320 control in separate housing

4.4 / 1

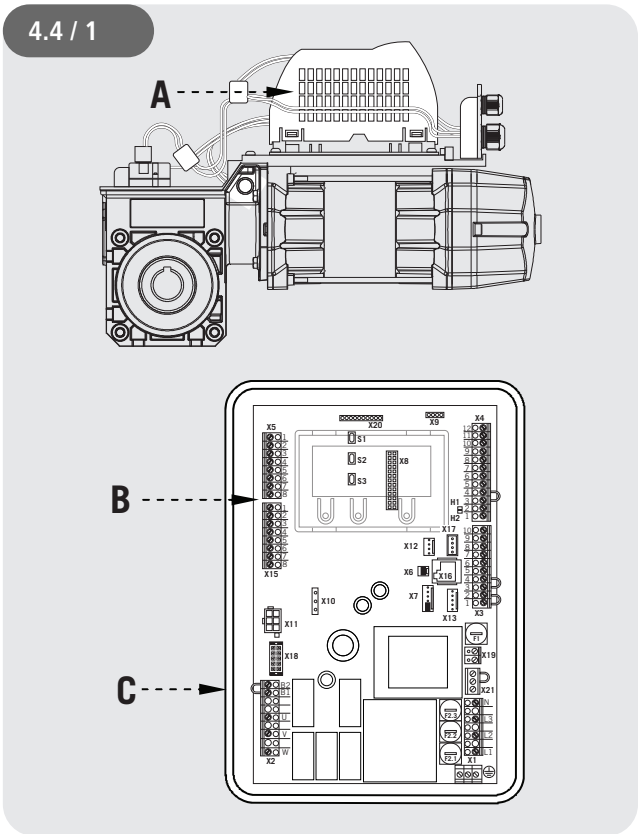

A Frequency converter
B CS 320 control
C Housing

Siemens frequency converter
Type V20 AA 230V/1~/0.75 kW incorporated in drive,
for STA series for use with spring-balanced sectional doors,
not including brake module or brake resistor

4.5 Version CS 320 FU-E
Frequency converter and CS 320 control together in one housing

4.5 / 1

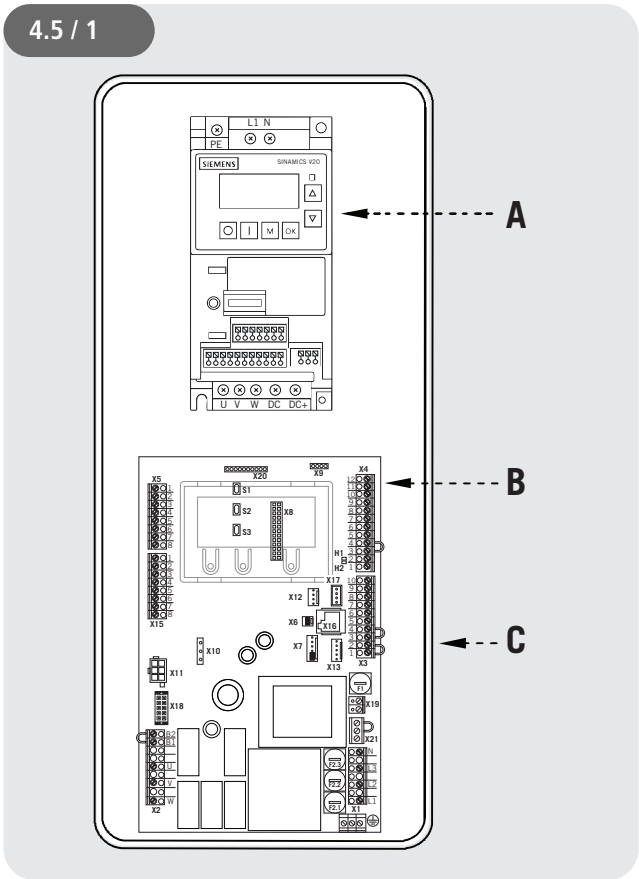

A Frequency converter
B CS 320 control
C Brake module / brake resistor (under the PCB)

Siemens frequency converter
Type V20 AA 230V/1~/0.75 kW in "Kombi" housing
for STA series,
not including brake module or brake resistor

Type V20 A 400V/3~/0.75 kW in "Kombi" housing
for MTZ, MDF, SDO series,
including brake module or brake resistor

4.5 / 2

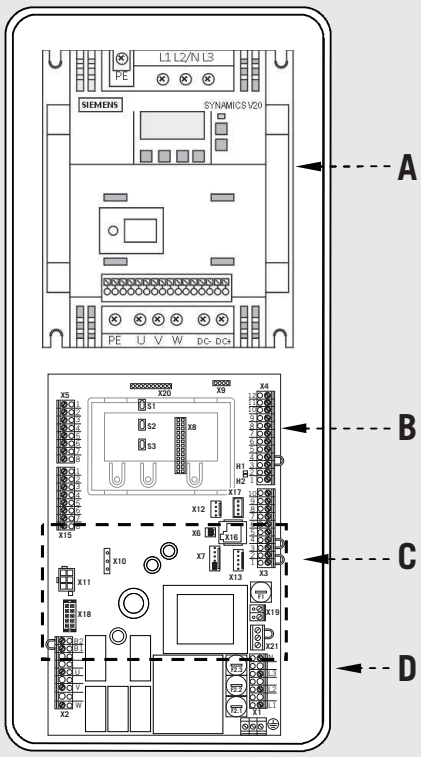

A Frequency converter
B CS 320 control
C Brake module / brake resistor (under the PCB)
D Housing

Siemens frequency converter

Type V20 400V/3~/1.5 kW in "Kombi" housing
Type V20 400V/3~/2.2 kW in "Kombi" housing
for MTZ, MDF, SDO series,
including brake module or brake resistor

4.5 / 3

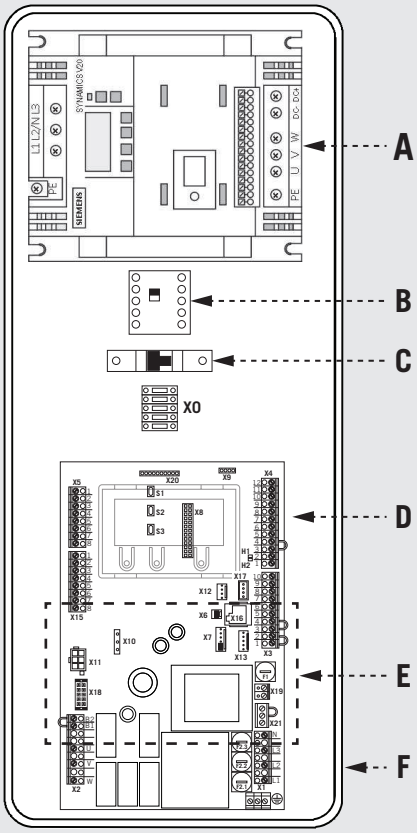

A Frequency converter
B Load contactor
C PCB fuse protection*
D CS 320 control
E Brake module / brake resistor (under the PCB)
F Housing
* Only version 230V/1~/1.5 kW und 400V/3~/4.0 kW

Siemens frequency converter
Type V20 230V/1~/1.5 kW in Maxi housing
Type V20 400V/3~/3.0 kW in Maxi housing
Type V20 400V/3~/4.0 kW in Maxi housing
for MTZ, MDF, SDO series,
including brake module or brake resistor

Product overview

4.6 Connection of Siemens V20-A / V20-AA frequency converter

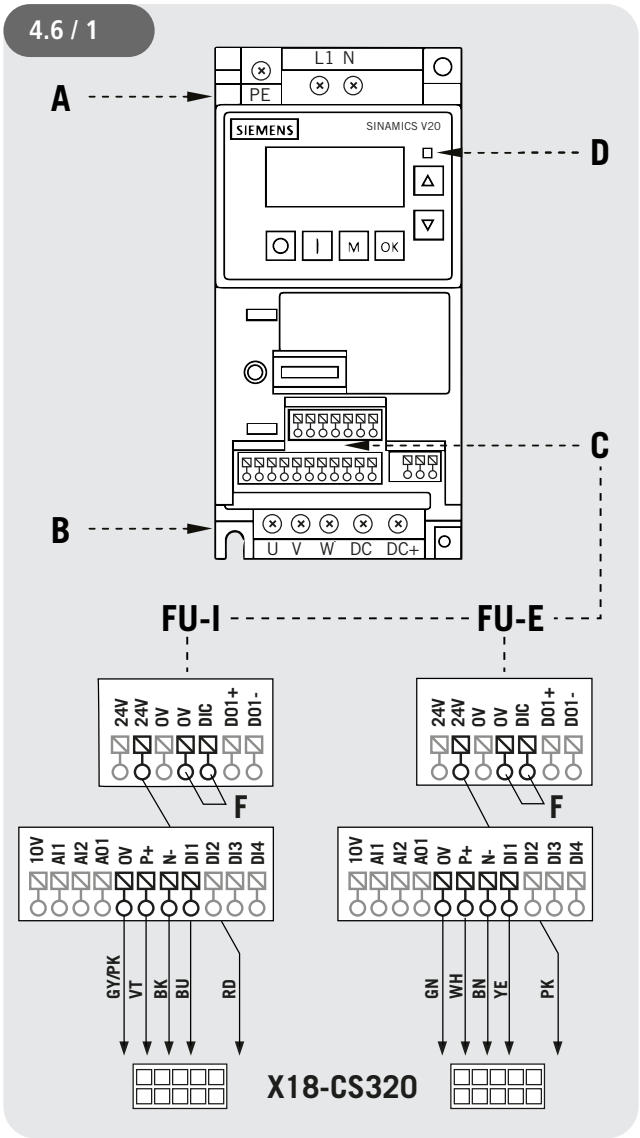

Legend:

BK	black	PK	pink
GN	green	RD	red
GY	grey	VT	violet
BU	blue	YE	yellow
WH	white	BN	brown

A Voltage supply, 230V/1~/N/PE (supplied through CS 320 / X2)
B Motor output, 230V/3~/PE
C Plug-in connection for FU data cable (different colour coding for FU-I and FU-E)
D LED FU operation

4.7 Connection of Siemens V20 frequency converter

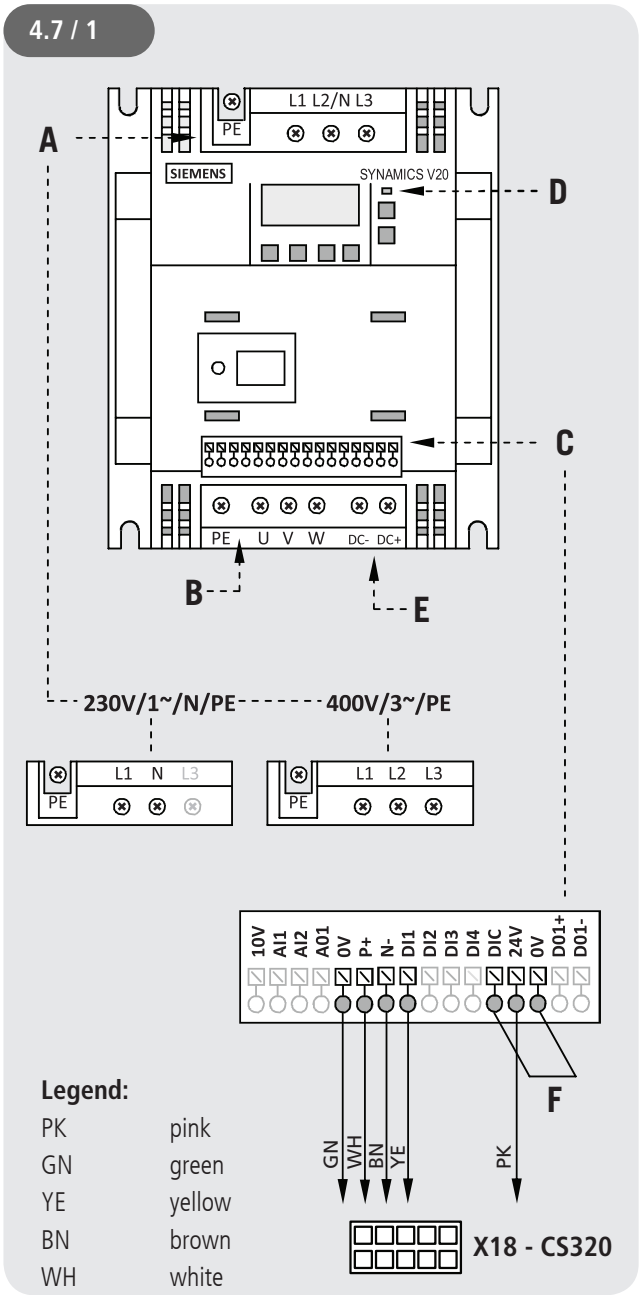

A Voltage supply, 230V/1~/N/PE or 400V/3 (supplied through CS 320 / X2)
B Motor output, 230V/3~/PE or 400V/3~/PE
C Plug-in connection for FU-E data cable
D LED FU operation
E Brake module connection, DC+/DC- (connection for brake resistor on brake module)
F Bridge (MUST be used)

5. Installation

5.1 Safety instructions for installation

WARNING!

Life-threatening danger due to electric shock!

☞ Before performing wiring work, always disconnect the system from the power supply. Make sure that the power supply remains disconnected during wiring work.

ATTENTION!

Property damage due to improper installation of the controller!

In order to avoid damage to the controller, observe the following points:

- Only qualified and trained electricians may work on electrical systems.
- Switch off the power supply to the system, check that it is de-energised and safeguard against reconnection.
- Mains cables and control cables must be routed separately.
- The line types and cross-sections must be selected in accordance with the valid specifications.
- It is essential to observe the local protective regulations.
- Observe the specifications of the door manufacturer for installation.

The following points must be correct to guarantee fault-free functioning:

- The door is installed, fully functional and designed for power-driven operation.
- The gear motor is fitted and ready for operation.
- The command and safety devices are fitted and ready for operation.
- The control housing with the CS 320 FU controller is fitted.

Observe the valid standards and regulations!

REFERENCE

The instructions from the respective manufacturer must be observed for the installation of the door, the gear motor and the command and safety devices.

5.2 Mains connection

Prerequisites

The following points must be correct to guarantee the function of the controller:

- The mains voltage must correspond with the information on the type plate.
- The mains voltage must be the same as the input voltage of the frequency converter.
- The output voltage of the frequency converter must be the same as the supply voltage for the operator.
- The motor rating data configured must comply with the data on the type plate.
- In the case of three-phase power, this must have a clockwise rotating field.
- With a fixed connection, an all-pole main switch must be used.
- With three-phase power, only triple block circuit breakers of type C (max. 16 A) shall be used.

ATTENTION!

Malfunctions due to improper installation of the controller!

- The use of frequency converters results in high-frequency pulsating direct fault currents/leakage currents against the protective conductor (PE). Any residual current device (RCD) used must therefore be of type B+ (VDE 0100-530, 531.3.2).
  We recommend using a separate fault current circuit breaker for every door or gate system.
- Before switching on the control for the first time, a check must be carried out after completing the wiring to ensure that all the motor connections on the motor and the control are securely fixed. All control voltage inputs are galvanically isolated from the supply.
- The control and load lines of the connected drives must be double-insulated along their entire route.

Installation

Detailed circuit diagram for mains connection and motor connection (230V / 1-phase / 0.75 kW)

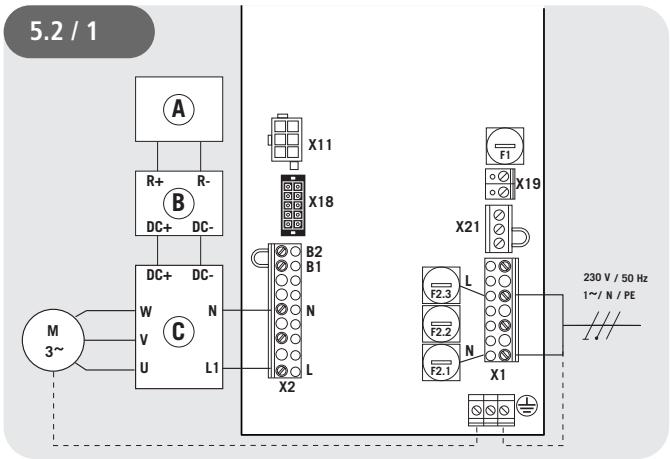

Detailed circuit diagram for mains connection and motor connection (230V / 1-phase / 1.5 kW)

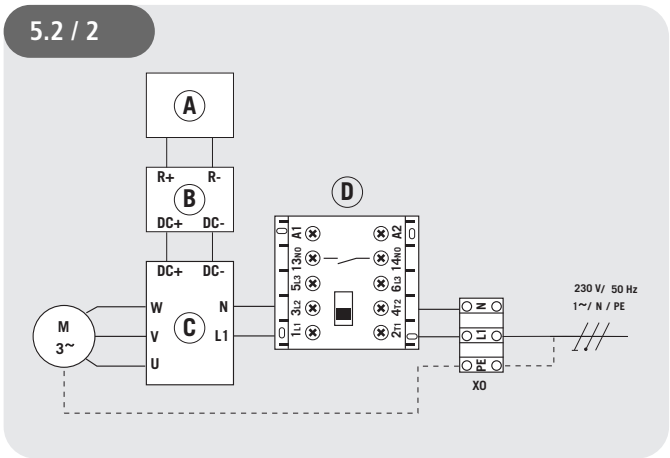

Detailed circuit diagram for mains connection and motor connection (400 V 3-phase / 1.5 kW / 2.2 kW)

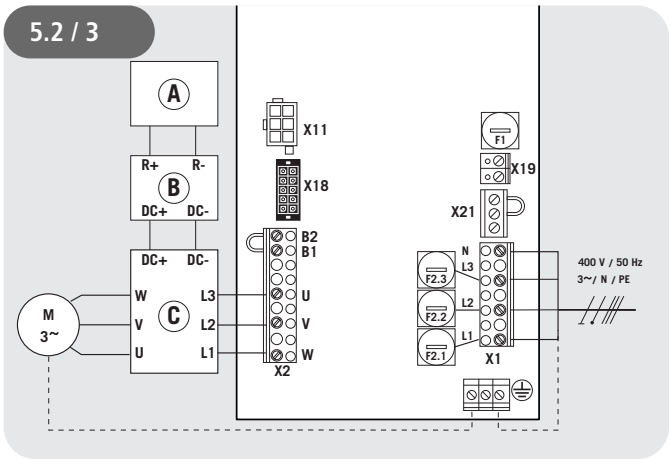

Detailed circuit diagram for mains connection and motor connection (400 V 3-phase / 4.0 kW)

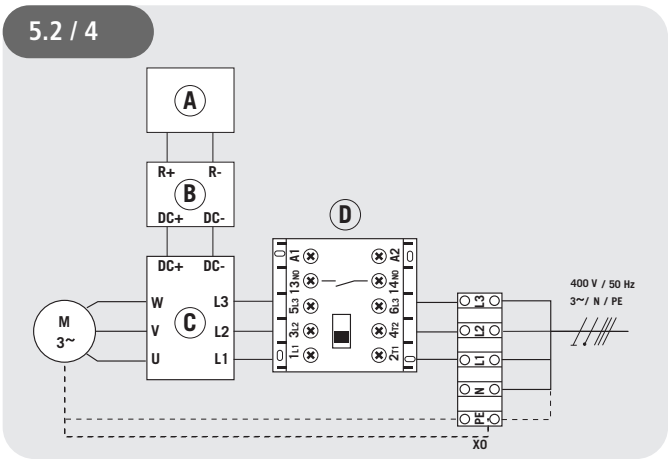

Key:

A	Brake resistor (not for STA and FDO range)
B	Brake module (not for STA and FDO range)
C	Frequency converter
D	Load contactor
M1:	Motor
X1:	Terminal block for mains connection (with load contactor)
X1:	Terminal block for mains connection
X2:	Terminal block for motor
X11:	Connector strip for electronic limit position system with safety circuit
X15:	Terminal block for mechanical limit switches (Safety circuit at X2 / B1-B2)
X19:	Power supply connection for external devices

Connection:

☞ Connect electronic limit position system to X11, or mechanical limit switch to X15 of the controller.

☞ Connect power supply frequency inverter (A) to X2, or X10 of the controller.

☞ Connecting the motor to the frequency converter.

☞ Connect FU (C) data cable to X18 of the control.

☞ Connect the control to the mains power supply.

☞ Cable groups must be secured close to their relevant terminals using a cable tie.

☞ Check and compare technical data.

➔ „13. Technical data“

5.3 Internal fuse protection

The controller CS 320 FU is equipped with internal fuse protection (F2) at the mains input. The fuse elements are equipped with fine fuses 8A / T (5.2 x 20 mm) in the factory.

5.3 / 1

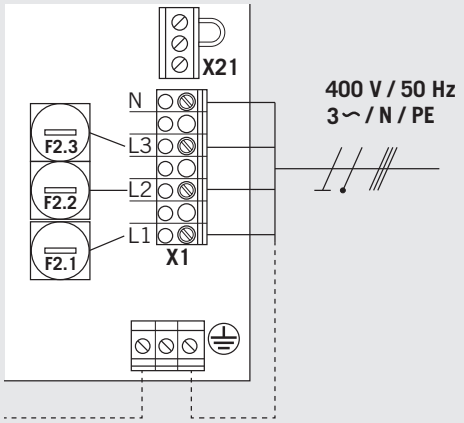

⚠ ATTENTION!

Malfunctions due to improper fuse protection of the controller!

Internal fuse maximum 10 A / T!

The internal fuses do not replace fuse protection of the supply cable. This shall be realised with max. 16 A and must be configured as triple block circuit breakers of type C.

➔ „5.2 Mains connection“

5.4 Mains voltage selection

The position of the bridge connector to X21 must be adjusted to the supply voltage and motor voltage.

5.4 / 1

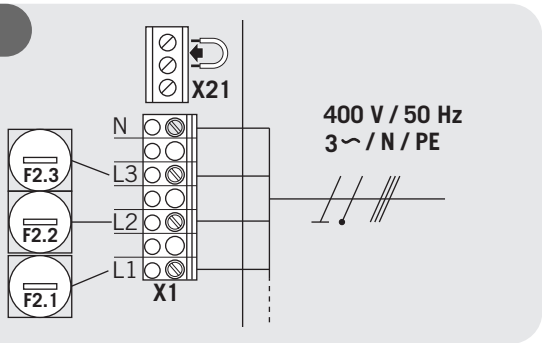

5.4 / 2

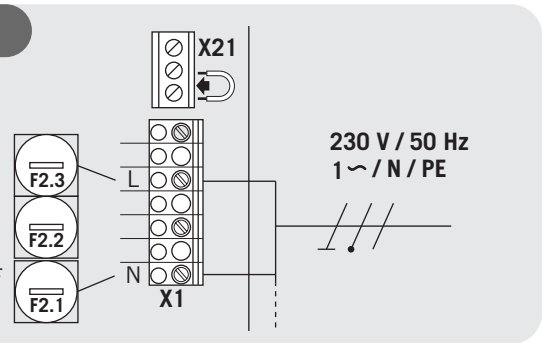

5.5 Supply to external devices (only with 400 V / 3-phase connection)

The CS 320 FU has 2 separate voltage supplies for external components, such as signal devices, light barriers, etc.

X19 230V/1~

X4 24V-DC

5.5 / 1

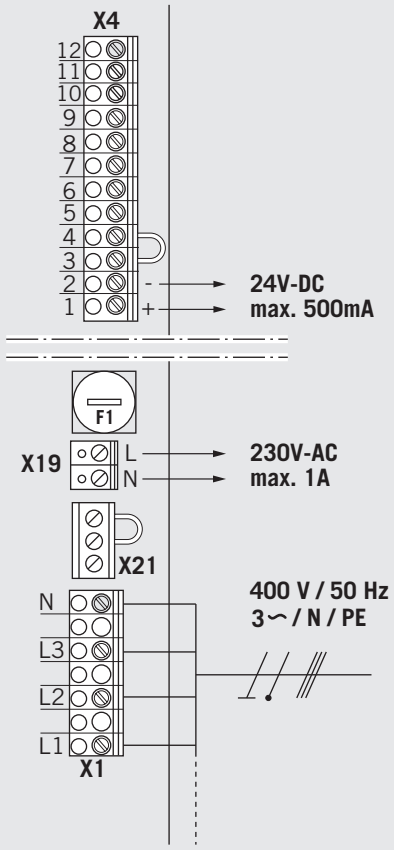

NOTE:

Use of the connection X19 is only possible with a supply with 400V / N / 3~.

The connection X19 is protected by the fuse element F1 (max. 1 A / T).

5.6 Connection of electronic limit position system absolute value encoder (AWG)

5.6 / 1

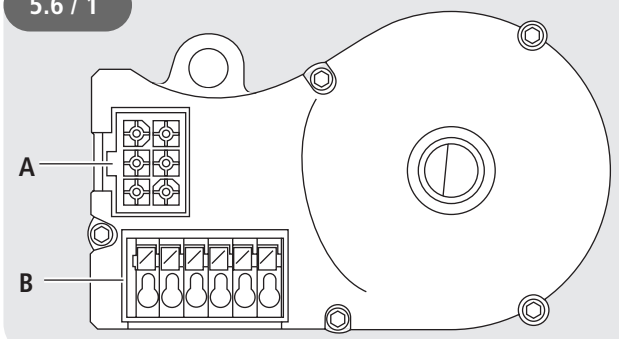

A: Absolute value encoder plug

B: AWG plug-in terminal

Connector strip X11 (on connector A)

5.6 / 2

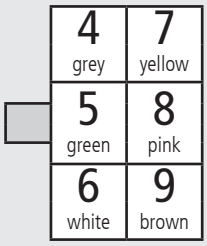

Cables with either numbered or coloured wires are used for the AWG, depending on the drive:

4 (grey): Safety chain input

5 (green): RS 485 B

6 (white): GND

7 (yellow): RS485 A

8 (pink): Safety circuit output

9 (brown): 12V DC

Connector strip B (only absolute value encoder)

5.6 / 3

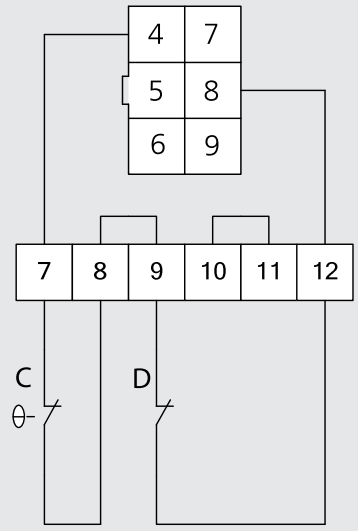

C: Thermal element in the drive

D: Emergency manual actuation (emergency crank or emergency chain)

NOTE:
In order to satisfy the requirements of EN 12453:2017 the electronic end position system must comply as a minimum with PL "c" with a min. category 2 per EN ISO 13849-1.
In order to satisfy this requirement, it is only permissible to use an absolute value encoder from Marantec Legden (art. no. 97957) as an electronic end position system.

5.7 Mechanical limit switch (MEC) connection

Alternatively to the absolute value encoder as an electronic system, it is also possible to connect a mechanical cam limit switch and evaluate this.
With first commissioning and after a RESET, the connected limit position system is automatically detected. With a subsequent change, the respective limit position system must be selected via a parameter setting in the INPUT operating mode.

Series STA, MDF05, MTZ05

5.7 / 1

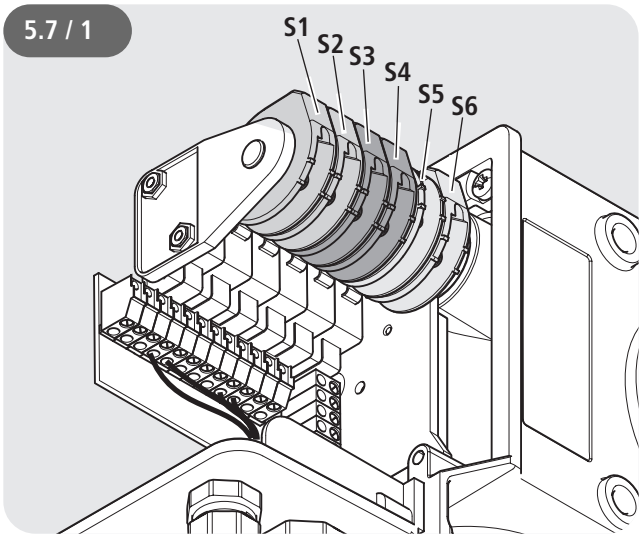

Series MDF20+, KD, MTZ20+

5.7 / 2

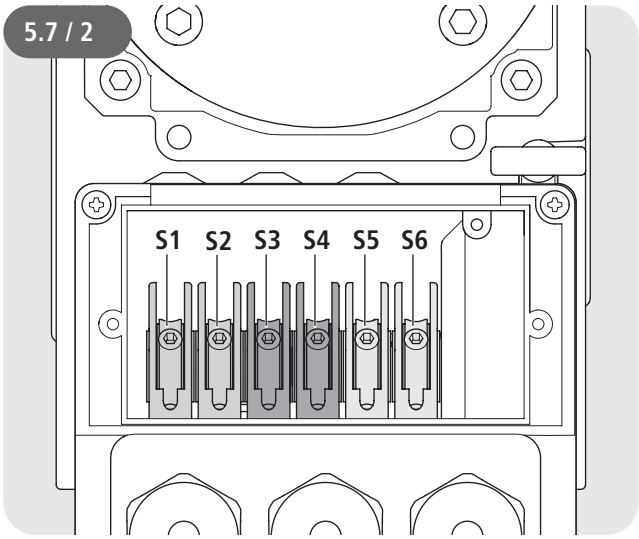

Mechanical limit switches

5.7 / 3

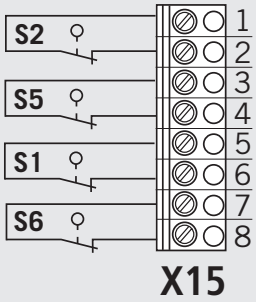

Safety circuit

5.7 / 4

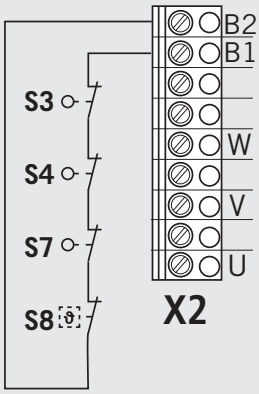

Installation

Example of connection with 7-wire solution

5.7 / 5

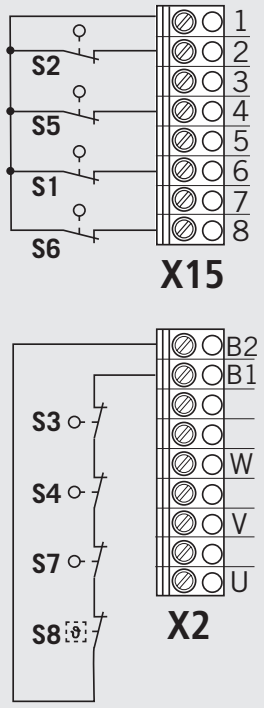

Legend:

S1	Supplementary limit switch UP
S2	Limit switch UP
S3	Safety limit switch UP
S4	Safety limit switch DOWN
S5	Limit switch DOWN
S6	Supplementary limit switch DOWN
S7	Emergency operation (NC - contact)
S8	Motor thermal protection

NOTE:

In order to satisfy the requirements of EN 12453:2017 the mechanical limit switches must have been approved as a "reliable component" in accordance with EN ISO 13849-1. Drives with integrated safety catch device must not be equipped with mechanical limit switches.

⚠ ATTENTION!

Property damage due to improper installation!

Connection as a 6-wire solution is prohibited and can lead to destruction of the CS 320 circuit board.

Reference potential on X2/B1-B2 = 24V-DC

Reference potential on X15=12V-DC

5.7 / 6

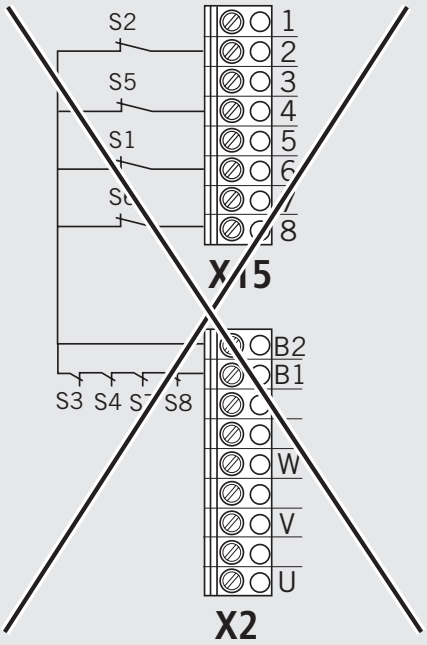

5.8 Connection of command devices

⚠ CAUTION!

Risk of injury due to uncontrolled door movement!
A CLOSE command in dead-man operation without a view of the door is not permitted.

☞ Install the command devices for the dead-man operation in direct visual contact with the door, although outside the danger zone for the operator.
A CLOSE command without visual sight of the door may only be given via input 1 / MOD32 (X4 / 9-10).

If the command device is not a key switch:

☞ Install it at a height of at least 1.5 m.

☞ Install it where it is inaccessible to the public.

Command devices (standard)

5.8 / 1

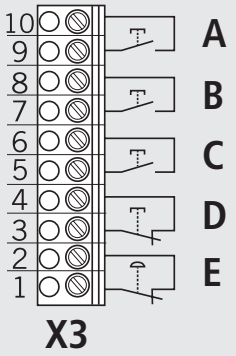

Legend:

A	Button / input DOWN
B	Button / input impuls
C	Button / input UP (UP inside, with active two-way control)
D	STOP button
E	Emergency stop command device

UP / STOP / DOWN switch (6-wire solution)

5.8 / 2

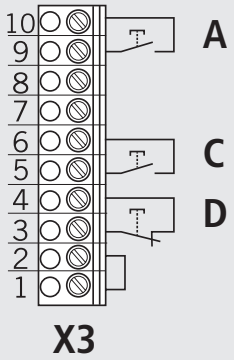

UP / STOP / DOWN switch (4-wire solution)

5.8 / 3

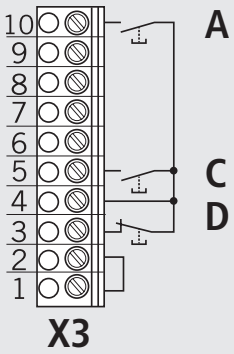

IMPULS button

Selection of the function via IMPULS parameter

➔ „11.2 Input operating mode“ on page 41

5.8 / 4

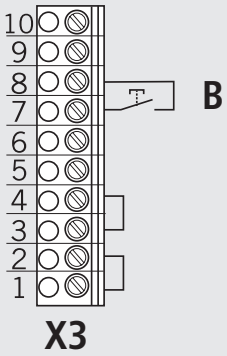

- UP switch
- STOP button

Installation

External radio receiver

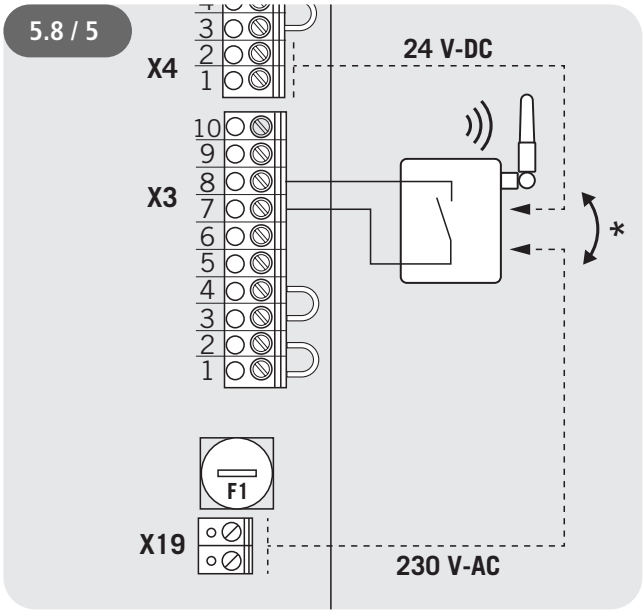

* optionally, depending on connection of the radio receiver

Key switch

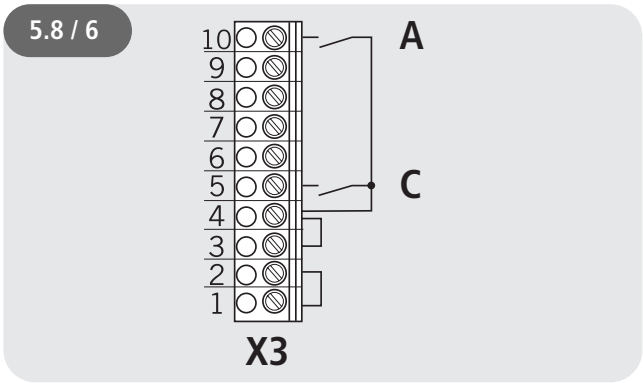

Legend:

A Button / input DOWN

C Button / input UP
(UP inside, with active two-way control)

Cover keypad KDT

Push-button with NO / NC contacts.
Up to year of manufacture 12 / 2009.

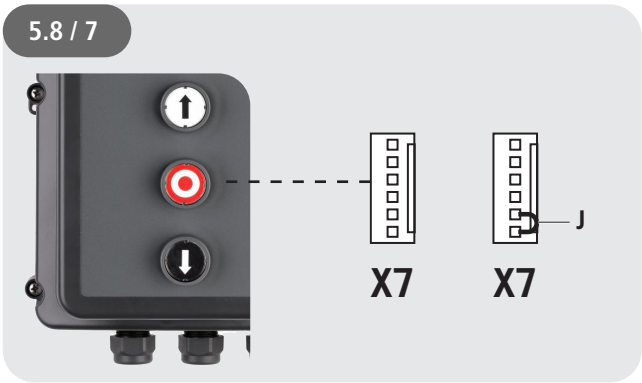

J Jumper (bridge)

The jumper must be connected if the KDT keypad is not connected.

Cover keypad CS

Silicone keys with NO contacts.
From year of manufacture 01 / 2010.

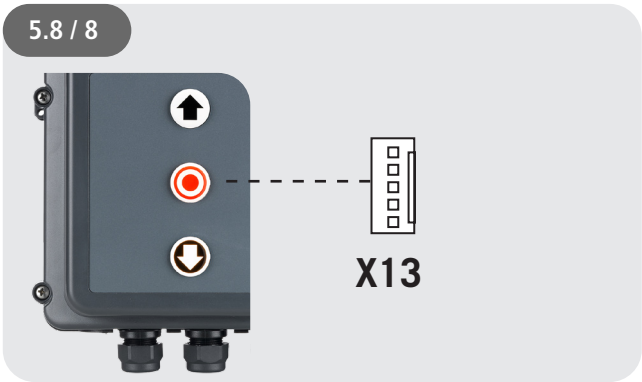

ON/OFF key switch
NC contact for interrupting the door function (optional).
This switch is part of the safety circuit.

5.8 / 9

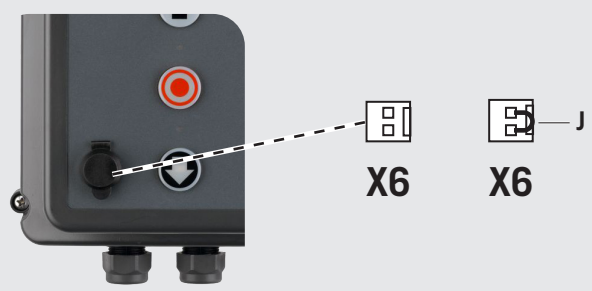

J Jumper (bridge)

The jumper must be connected if the key switch is not connected.

5.9 Light grid connection

It is possible to connect up to 2 light grids to the CS 320 FU
Light grid 1 is connected to the closing edge protective device input. Light grid 2 is connected to programmable input 2.

Light grid 1
Parameter SKS = MOD4
The connection cable (A) is pluggable.

5.9 / 1

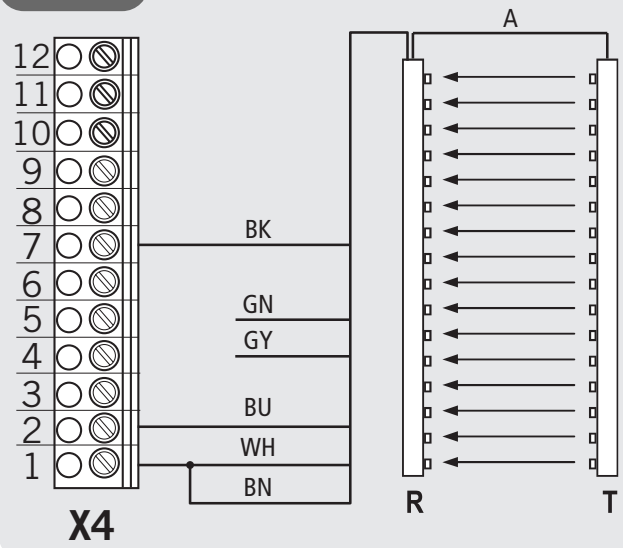

Light grid 2
Parameter INPUT 2 = MOD 12
The connection cable (A) is pluggable.

5.9 / 2

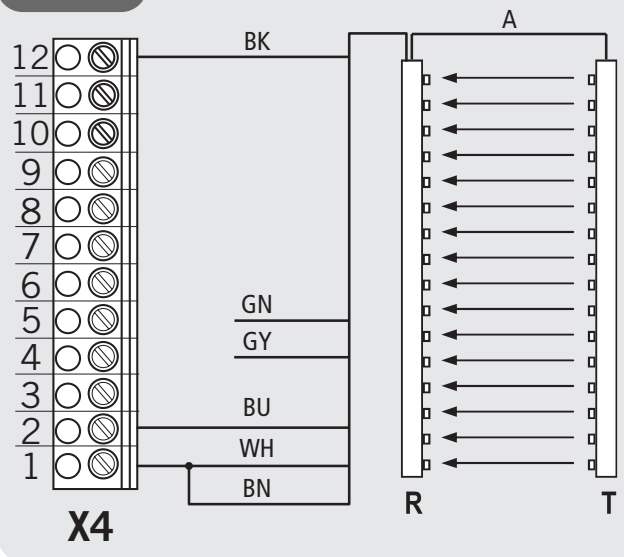

Legend:

BK	Black
GN	Green
GY	Grey
BU	Blue
WH	White
BN	Brown

R	Receiver
T	Transmitter

NOTE:
The GridScan/Pro light grids from Cedes are shown on an exemplary basis in this manual.
The GridScan/Pro light grids correspond to
– Performance Level d, category 2 per EN ISO 13849-1
– Protection level E per EN 12453:2017

Diagrams from other manufacturers on inquiry.

REFERENCE

For a precise description of the function and connection, refer to the separate documentation for the light grid.

5.10 Connection of closing edge protective device 1

With first commissioning and after a RESET the system of the closing edge protective device is automatically detected and programmed. If no closing edge system is connected, the input is requested every time the power is switched on again until a closing edge system has been detected. With a subsequent change, the respective system must be selected via a parameter setting in the INPUT operating mode. In the case of light barriers with a test function, this must be set manually.

➔ „11.2 Input operating mode“

Optoelectronic closing edge protective device (OSE)

Parameter SKS = MOD1

5.10 / 1

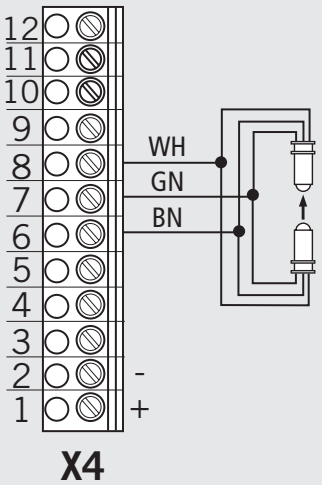

Legend:

WH	White
GN	Green
BN	Brown

Electrical closing edge protection (8.2 kOhm)

Parameter SKS = MOD2

5.10 / 2

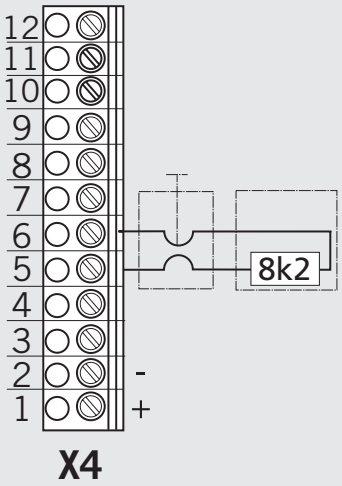

Pneumatic closing edge protection (DW)

Parameter SKS = MOD3 / testing automatically active

5.10 / 3

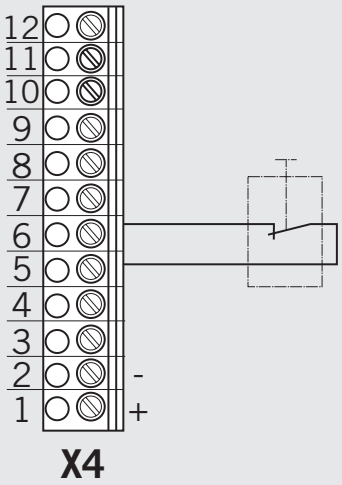

5.11 Connection light barrier 1

With first commissioning and after a reset the light barrier is automatically detected and programmed. If no light barrier system is connected, the input is requested every time the power is switched on again until a light barrier system has been detected. With a subsequent change, the respective system must be selected via a parameter setting in the input operating mode.
In the case of light barriers with a test function, this must be set manually.
➔ „11.2 Input operating mode“

Light barrier 4-wire NC

without testing parameter LIGHT BARR 1 = MOD 3
with testing parameter LIGHT BARR 1 = MOD 5

5.11 / 1

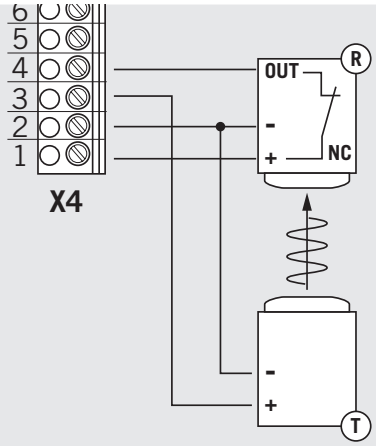

Light barrier Marantec Legden 2-wire

with testing parameter LIGHT BARR 1 = MOD 1

5.11 / 2

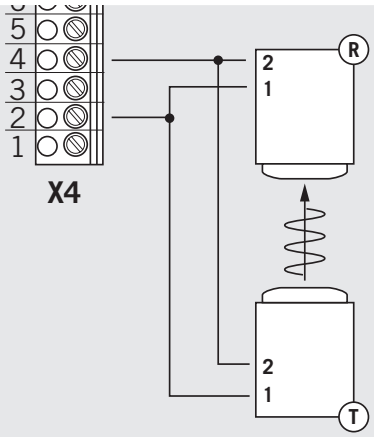

Light barrier 3 wire NPN

without testing parameter LIGHT BARR 1 = MOD 2
with testing parameter LIGHT BARR 1 = MOD 4

5.11 / 3

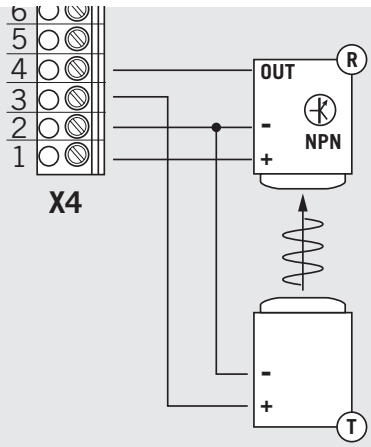

Light barrier 3 wire PNP

without testing parameter LIGHT BARR 1 = MOD 3
with testing parameter LIGHT BARR 1 = MOD 5

5.11 / 4

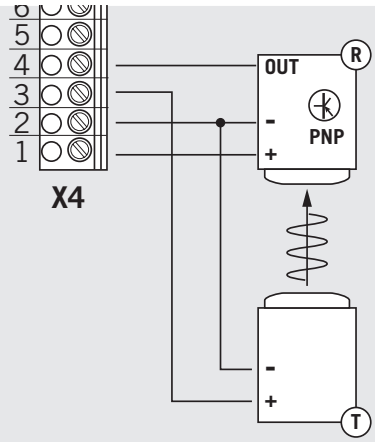

Legend:

R Receiver
T Transmitter

NOTE:

All light barriers are active in the UP or DOWN direction depending on the setting.
➔ „11.2 Input operating mode“ (Parameter LB FUNC 1)

5.12 Terminal assignment, relay outputs

Four potential-free relay outputs are available, which can be programmed with a variety of types of function.
➔ „11.2 Input operating mode“

5.12 / 1

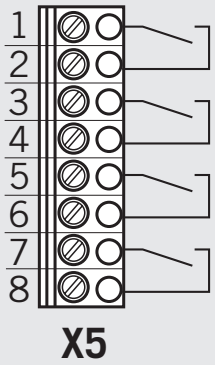

- Relay 1
- Relay 2
- Relay 3
- Relay 4

Internal relay switch contacts

There are four potential-free relay outputs able to take a max. load of 4A at 230 V/1~.

The type of function depends on the parameter setting for the respective relay output in the INPUT operating mode.

5.13 Connection of programmable inputs

The controller CS 320 FU has 3 programmable inputs, for which different functions can be selected.
The type of wiring is determined on the basis of the parameter settings for the individual inputs.
➔ „11.2 Input operating mode“ (Parameter INPUT 1-3)

⚠ ATTENTION!

Danger of damage to the circuit board due to incorrect connection!
Inputs 1, 2 and 3 have different reference potentials and must not be operated from a common potential!

Input 1
Optional wiring with NO / NC contacts.
Reference potential 24V-DC
➔ „11.2 Input operating mode“ (Parameter INPUT 1)

5.13 / 1

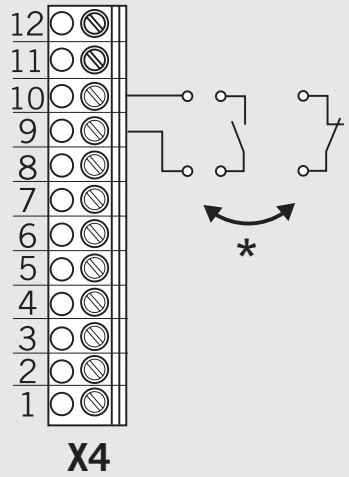

* optionally

Input 2

Optional wiring with components on a 8.2 kOhm basis, NO / NC contacts and photo sensors.
Reference potential 12V-DC

➔ „11.2 Input operating mode“ (Parameter INPUT 2)

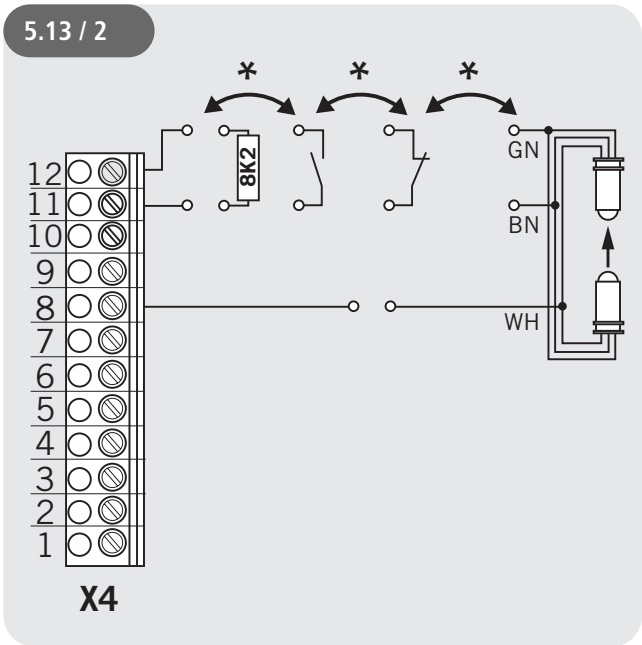

* optionally

Legend:

GN	Green
BN	Brown
WH	White

NOTE:

Programmable input 2 can also be used for the connection of a light grid.

➔ „5.9 Light grid connection“

Programmable input 2 is also used as a safety input in accordance with EN 12453:2017.
If a resistance value is detected with first commissioning and after a reset, the MOD2 (safety input) is activated automatically. Individually connected closing edge protective device 8.2 kOhm must be activated manually in this case.

➔ „5.14 Safety input per EN 12453“

Input 3

Connector strip for optional wiring with pluggable week timer, pluggable brake monitoring module BWM1 or as connection for monitoring an external load contactor and drive brake.
Reference potential 5V-DC

➔ „11.2 Input operating mode“ (Parameter INPUT 3)

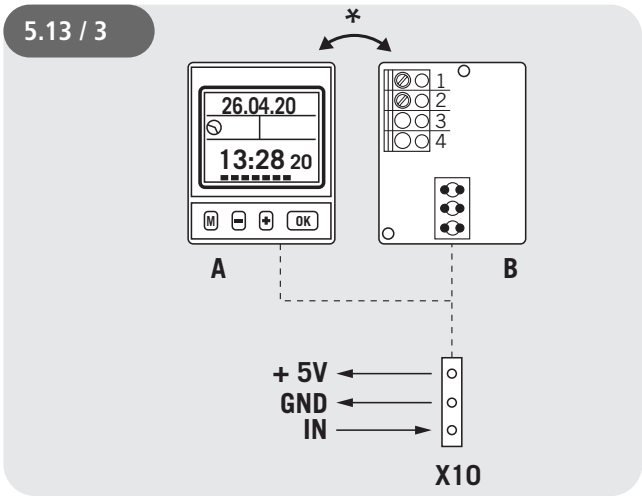

* optionally

A Week timer

The week timer offers a weekly program for opening the door system and keeping it open with up to 8 switching times per day. While the door is held open, the timer emits a continuous signal that prevents the door system from closing.
After the set time interval has expired, this continuous signal is switched off and the door system can be closed again, e.g. manually via a CLOSE command.
Alternatively, automatic closing is also possible.
For this purpose the parameter OPEN TIME = 1 must be set in the input operating mode.

B Brake monitoring module BWM1

The brake monitoring module is required for drives with a brake connected (relay 4 / MOD 14-16). The module monitors the brake function.

C Monitoring an external load contactor and drive brake (optional)

➔ „5.13 / 5“

REFERENCE

For a precise description of the function and connection, refer to the separate documentation for the week timer and brake monitoring module.

Installation

Connection of the brake monitoring module

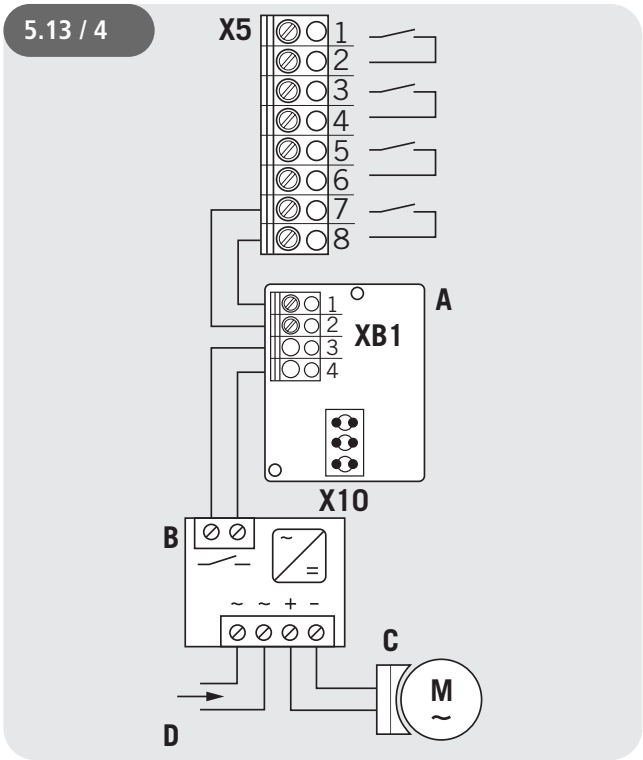

Legend:

A Brake monitoring module BWM 1
B Brake rectifier
C Drive brake
D Brake power supply (AC)

NOTE:
If MOD14-16 (brake actuation) is set on relay 4, the mode for the brake monitoring module is automatically set at input 3. If a timer is used, this setting must be adapted to set the MOD for the timer at input 3.
Optionally, input 3 can also be used for monitoring an external load contactor and the drive brake.
The parameter INPUT 3 must then be set to MOD22.

Connection for monitoring an external load contactor and drive brake (optional)

If the power of the door drive/frequency inverter used exceeds the maximum load capacity of the internal contactor, an external load contactor must be used.
In this case, it is possible to monitor the external load contactor and drive brake with input 3 and therefore guarantee safe operation.

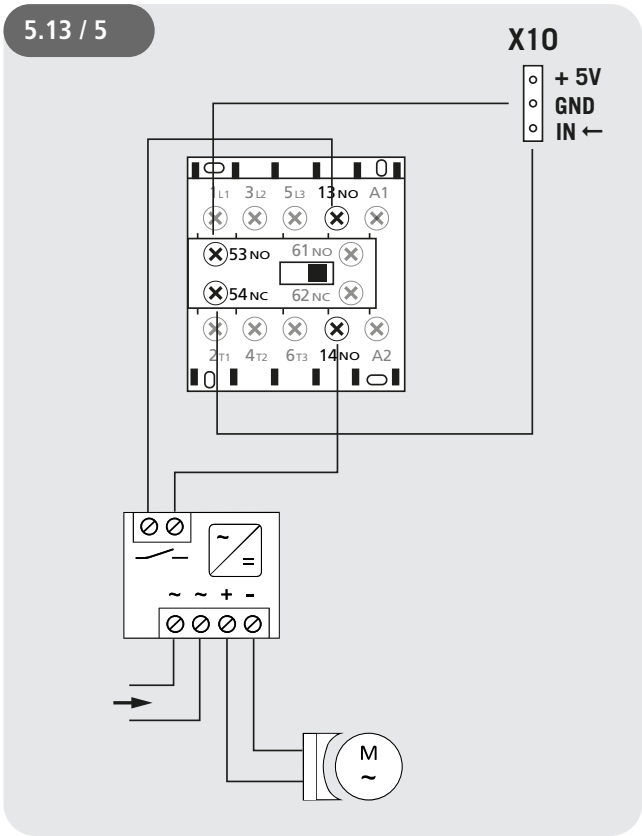

The wiring preparation is carried out in the factory.

5.14 Safety input per EN 12453

Increased requirements on the fail-safety of the slip door switch have been part of EN 12453 since 2001. With EN 12453:2017 increased safety requirements (PLc, Cat.2) also apply, for example to slack rope switches and switches of fall protection systems, including the transmission and processing of the signal.

With the setting MOD2 the programmable INPUT 2 allows the evaluation of these components, which all work with an internal resistance value of 8.2 kOhm. If a fault occurs in one of the components, the system can no longer be operated and the message ERROR STOP appears on the display.

1 – 4 components on a 8.2 kOhm basis can be linked according to the following wiring diagrams. It does not matter which of the respective switches represents the components 1 - 4 here.
* optionally

CHECK

The tolerance of the individual resistance values must not exceed max. 1%.

Connection 4 components

5.14 / 1

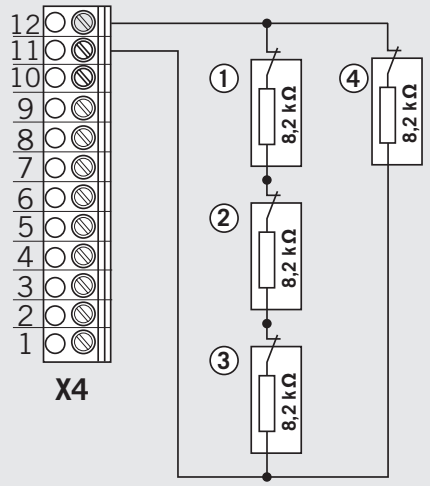

Connection 3 components

5.14 / 2

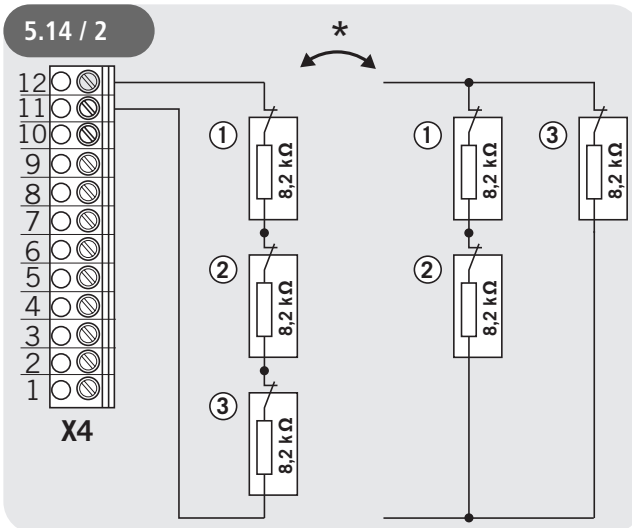

Connection 2 components

5.14 / 3

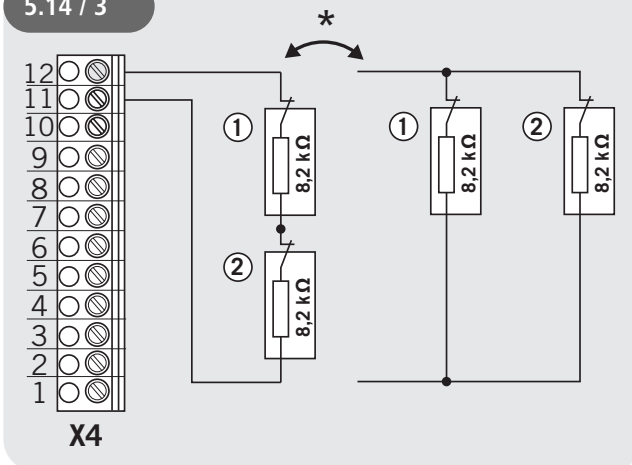

Connection 1 component

5.14 / 4

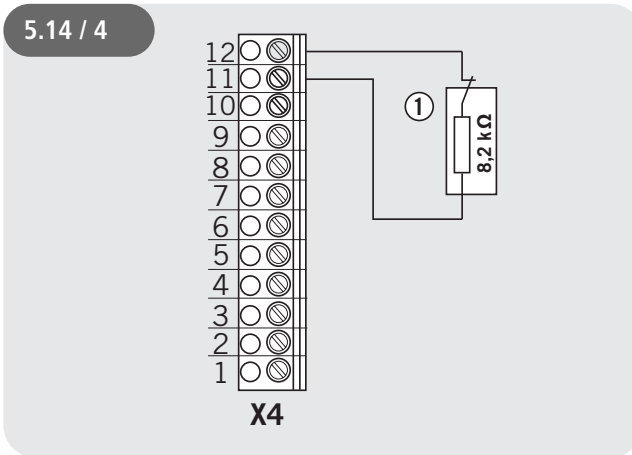

NOTE:
With first commissioning and after a reset, input 2 is set to A (self-teaching) once.
If a resistance value is detected, MOD2 (safety input) is automatically set and the measured value is stored and monitored as a reference for the connected safety-related components.
Deviation of the measured value leads to an error message.

If a safety element is subsequently added or removed, the resistance measurement must be performed again. For this purpose the parameter INPUT 2 must be manually reset to A (self-teaching) and the supply voltage must be switched off and on again once. Renewed measurement then takes place.

The components used must either comply with EN ISO 13849-1 PLc/Cat.2 or be approved as a reliable component in order to satisfy the requirements of EN 12453:2017.

Alternatively, the fall protection can also be equipped with an NC contact and integrated in the safety circuit of the controller (X3/1-2). This switch with NC contact must be approved as a reliable component per
EN ISO 13849-1. To ensure cross-wire short monitoring, the connection cable must be laid in a protective tube.

5.15 Radio receiver, pluggable

2 different pluggable radio receivers can be connected to the controller directly.

CS-radio 1-channel, multi-bit, 15 storage spaces
- 868 MHz - art. no. 76616
- 433 MHz - art. no. 76614

Compatible hand-held transmitter:
- RT 52, 28, 29, 31
- Digital 382, 384, 313, 321, 323, 306, 318

Digital 991 1-channel, AES 128 Bit, 200 storage spaces
- 868 MHz - art. no. 118726
- 433 MHz - art. no. 118727

Compatible hand-held transmitter:
- Digital 564, 663, 572, 633, 506, 517, 518

5.15 / 1

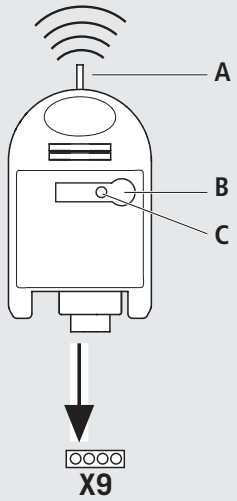

A Antenna
B Programming button
C LED

REFERENCE

For a precise description of the function and connection, refer to the separate documentation for the radio receiver.

5.16 CS radio

Connection

☞ Plug the radio receiver into connector strip X9.

Teach transmitter codes

☞ Press and hold the programming button (B) for longer than 1.6 seconds. The programming mode is activated. The LED (C) flashes.

☞ Press the channel button of your transmitter. If the radio controller has stored the transmitter code, the LED lights up for approx. 4 seconds.

A total of 15 transmitter codes (hand-held transmitter) can be taught.
If all storage spaces are occupied, the LED flashes very rapidly. Furthermore, it is possible to integrate additional hand-held transmitters through duplication from one hand-held transmitter to the next.

Targeted deletion of a transmitter code

☞ Press and hold the programming button (B) for longer than 1.6 seconds. The programming mode is activated. The LED (C) flashes.

☞ Continue to press and hold the programming button. Erase mode is activated. The LED flashes very quickly.

☞ Press the desired channel button of your transmitter. If the LED lights up for approx. 4 seconds, the corresponding transmitter code has been deleted.

You can cancel the deletion process by briefly pressing the programming button.

RESET (completely delete memory)

☞ Press and hold the programming button (B) for longer than 1.6 seconds. Programming mode is activated. The LED (C) flashes.

☞ Continue to press and hold the programming button. Erase mode is activated. The LED flashes very quickly.

☞ Press and hold the programming button for longer than 1.6 seconds. If the LED lights up for approx. 4 seconds, all storage spaces have been deleted.

You can cancel the deletion process by briefly pressing the programming button.

5.17 Digital 991

Connection

☞ Plug the radio receiver into connector strip X9.

Teach transmitter codes

☞ Press and hold the programming button (B) for longer than 1.6 seconds. The programming mode is activated. The LED (C) flashes.

☞ Press the teach button and then the channel button of your transmitter. If the radio controller has stored the transmitter code, the LED lights up for approx. 2 seconds.

A total of max. 200 transmitter codes (hand-held transmitter) can be taught. If all storage spaces are occupied, the LED flashes very rapidly.

Targeted deletion of a transmitter code.

☞ Press and hold the programming button (B) for longer than 1.6 seconds. The programming mode is activated. The LED (C) flashes.

☞ Continue to press and hold the programming button. Erase mode is activated. The LED flashes very quickly.

☞ Press the desired channel button of your transmitter. If the LED lights up for approx. 2 seconds, the corresponding transmitter code has been deleted.

You can cancel the deletion process by briefly pressing the programming button.

RESET (completely delete memory)

☞ Press and hold the programming button (B) for longer than 1.6 seconds. The programming mode is activated. The LED (C) flashes.

☞ Continue to press and hold the programming button. Erase mode is activated. The LED flashes very quickly.

☞ Press and hold the programming button again for longer than 1.6 seconds. If the LED lights up for approx. 2 seconds, all storage spaces have been deleted.

You can cancel the deletion process by briefly pressing the programming button.

5.18 Connection of external radio receiver

In addition to the standard connection of an external radio „5.8 / 5“ External radio receiver) there is also an additional optional pre-wired, pluggable variant.

5.18 / 1

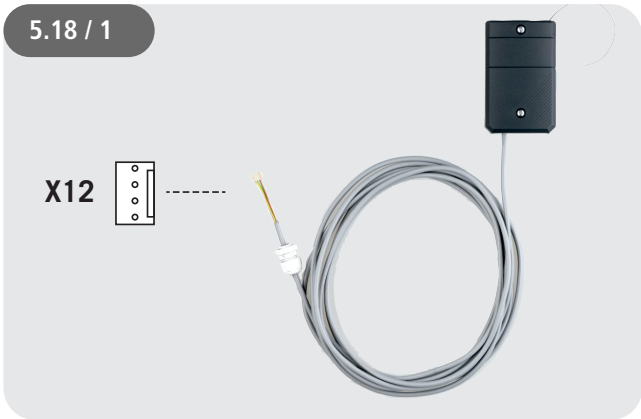

REFERENCE

For a precise description of the function and connection, refer to the separate documentation for the BUS modules.

5.19 Connection of frequency converter

It is possible to connect a Siemens frequency converter for speed-independent control of the door drive via interface X18.

5.19 / 1

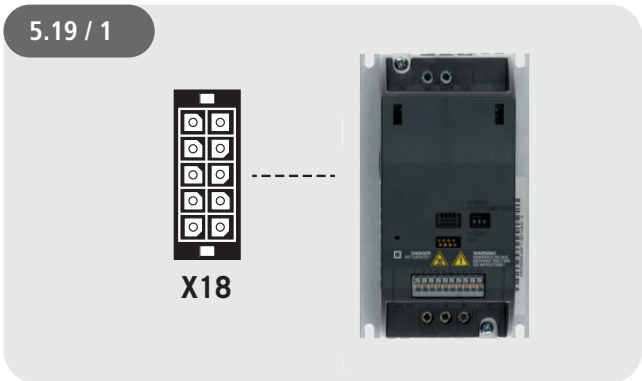

ATTENTION!

Property damage due to improper installation!
When using a frequency converter, the drive, wiring and converter module must be compatible.
☞ Please contact technical support.

5.20 Connection of LCD monitor

Full access to all menu settings and parameters of the controller is possible via the LCD monitor.
➔ „8. Programming“

Plug-in base X8

5.20 / 1

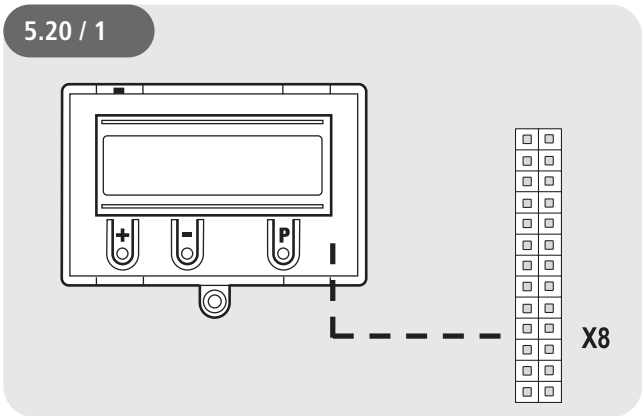

⚠ ATTENTION!

Property damage due to improper installation!
The LCD monitor must be plugged in whilst de-energised.
Only an LCD monitor from Marantec Legden
(art. no. 91447) may be used.

⚠ ATTENTION!

Property damage due to improper installation!
The Marantec Legden LED module (art. no. 103239) cannot be combined with the CS 320 FU. Use and commissioning can lead to destruction of the CS 320 FU circuit board.

5.20 / 2

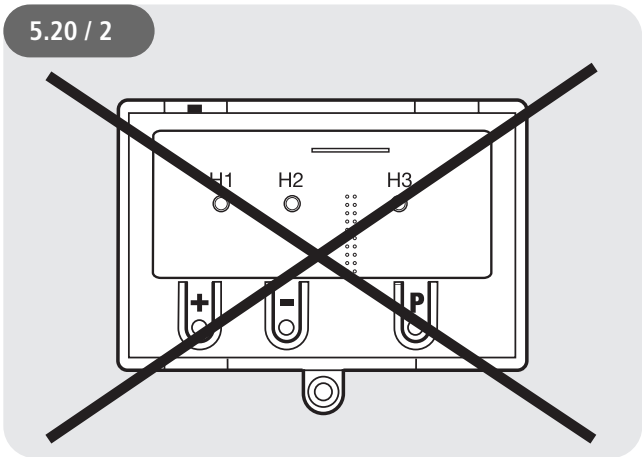

5.21 Connection of MS BUS components

Two BUS interfaces are present on the circuit board for connecting different components.
The MS-BUS LCD monitor (#121246) is supplied with a 3 m long connection cable.
The MS-Bus LCD monitor (like the standard LCD monitor) permits full access to all parameter settings.
It is possible to expand functions or realise additional functions with the MS BUS function modules.

- ES module: Evaluation of trap-in protection systems
- I/O module: Input/output expansion
- GV module: Two-way control

Connector strip X16 / X17

5.21 / 1

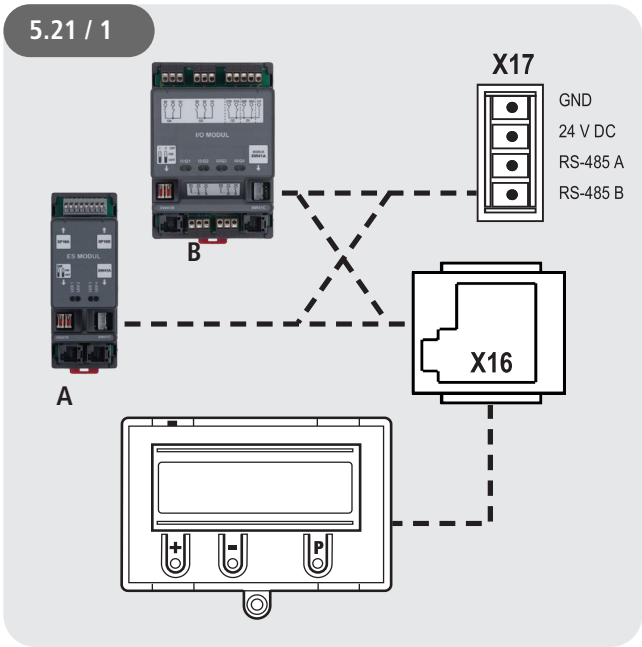

A	ES module	Connection to X16 or X17
B	I/O module / GV module	Connection to X16 or X17
C	LCD monitor	Connection to X16 only

REFERENCE

For a precise description of the function and connection, refer to the separate documentation for the BUS modules.

NOTE:
The connector strips X16 and X17 can only be assigned once. However, multiple BUS modules can be connected through special bypass cables.
The current consumption must be considered with this.

Installation

5.22 Transmission system radio

The transmission system radio is a radio system with bi-directional operation. The transmission system facilitates wireless signal transmission from safety equipment to door systems.
The radio connection exists between an internal, pluggable component, which is connected to X20, and an external unit that is mounted on the door leaf.
It is possible to transmit signals from different closing edge systems and/or a safety circuit.
Transmission with spiral cable is thereby omitted.

5.22 / 1

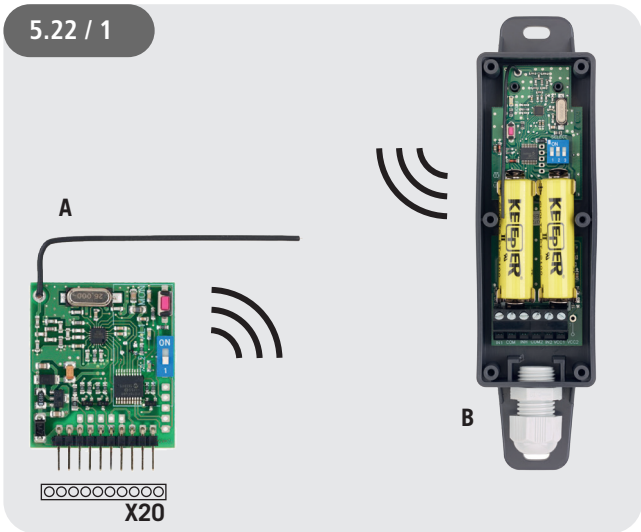

A Pluggable components. Is connected to connector strip X20 of the CS 320.

B External unit. Is mounted on the door leaf. The safety strip and safety circuit are connected here.

REFERENCE

For a precise description of the function and connection, refer to the separate documentation for the transmission system.

6. Initialisation

With first commissioning and after a RESET the following components are automatically detected and programmed:

- End position system
- Closing edge protective device
- Light barrier system
- Input 2 (safety input)

During this process (approx. 60 seconds) the green LED flashes and the display shows "PLEASE WAIT …" in the top line.
Operation of the system is not possible at this time.
The end position system must be installed before first commissioning.

Components can be retrospectively changed or added via the LCD display or renewed initialisation.
If a component is not yet connected, this is shown in the display with "A".
A search for this component takes place with every subsequent initialisation. If this is detected, the corresponding setting mode is set automatically.

Exception:
Input 2 remains inactive (OFF), if a resistance value is not detected with first initialisation.
If a resistor is detected at input 2 with first commissioning, this is evaluated as a safety element and put into operation as a safety input.
➔ „11.2 Input operating mode" / parameter INPUT 2

NOTE:
Initialisation serves not only to teach the different system components, but also offers the option of changing the menu language directly.
The pre-set menu language (ENGLISH) appears for 60 seconds as flashing text in the display. With the [+] and [–] buttons it is possible to select the desired language and save this with the [P] button. All texts / messages are subsequently displayed in the selected language.

7. Setting the limit positions

7.1 Checking the drive / travel direction

Change to adjustment mode

☞ Press the (P) button until ADJUSTMENT appears.

Checking the drive direction

☞ Press the (+) button. The door must open.

☞ Press the (-) button. The door must close.
If this is correct, proceed to setting the limit positions.
Otherwise, change the direction of travel.

Changing the direction of travel

☞ Press and hold the buttons (+) and (–) simultaneously for more than 5 seconds. The display shows "LEFT ROT FIELD".
Any limit positions that were saved will have been deleted.
Proceed with the setting the limit positions.

7.2 Setting the mechanical limit switches

Change to adjustment mode

☞ Press the (P) button until ADJUSTMENT appears.

Setting the UP and DOWN limit positions

REFERENCE

Setting the limit positions is described in the separate documentation for the mechanical limit switches.

☞ Exit adjustment mode by pressing the (P) button.

Note

The system does not exit adjustment mode automatically.
Exit adjustment mode by pressing the (P) button in order to change to normal mode.

7.3 Setting the electronic end position system using the setting buttons on the circuit board

Change to adjustment mode

☞ Press the button (P) for approx. 5 seconds.
The red LED flashes slowly.

Setting the UP end position

☞ Drive the door to the desired UP end position by pressing the (+/–) buttons.

☞ Save end position by pressing the (P) button and additionally also the (+) button.
The red LED flashes rapidly for approx. 1 second.

Setting the DOWN end position

☞ Drive the door to the desired DOWN end position with the (+/–) buttons.

☞ Save end position by pressing the (P) button and additionally also the (–) button.
The red LED flashes rapidly for approx. 1 second.

The adjustment mode is automatically exited.
The red LED goes out.

Note

- The adjustment mode is automatically exited after approx. 7 minutes, if no button is pressed.
- Normal operation is not possible until both end positions have been learned through the initial calibration.
- If an end position is to be corrected, the ADJUSTMENT mode can be exited by pressing the (P) button after learning the special end position.
- After programming the limit switches, the system run-time is learned automatically. The controller functions are the same as in automatic mode.

Setting the limit positions

7.4 Setting the electronic limit position system via the LCD monitor

⚠ ATTENTION!

Improper assembly will cause damage or destruction!

The monitor must be plugged in whilst de-energised. Only a standard LCD monitor (#91447) from Marantec Legden may be used.

Change to adjustment mode

☞ Press the (P) button until ADJUSTMENT appears.

Setting the UP end position

☞ Drive the door to the desired UP end position by pressing the (+/–) buttons.

☞ Save end positions by pressing the (P) button and additionally also the (+) button.
"STORE UP" appears in the display.

Setting the DOWN end position

☞ Drive the door to the desired DOWN end position with the (+/–) buttons.

☞ Save end position by pressing the (P) button and additionally also the (–) button.
"STORE DOWN" appears in the display.

The adjustment mode is automatically exited.

Note

– The adjustment mode is automatically exited after approx. 7 minutes, if no button is pressed.
– Normal operation is not possible until both end positions have been learned through the initial calibration.
– If an end position is to be corrected, the ADJUSTMENT mode can be exited by pressing the (P) button after learning the special end positions.
– After programming the limit switches, the system run-time is learned automatically. The display shows TEACH IN RUN. The controller functions are the same as in automatic mode.

7.5 Setting the intermediate positions of the electronic limit position system via the LCD monitor

Drive the door to the desired position in automatic mode

☞ Drive the door to the desired intermediate positions (INT POS UP or INT POS DOWN) with the (+/–) buttons.

Change to input mode

☞ Press the (P) button until INPUT appears.

☞ Press and hold the buttons (+) and (–) simultaneously for more than 2 seconds. The first parameter appears in the second line of the display.

Save the intermediate UP (INT POS UP) or DOWN (INT POS DOWN) position

☞ Press the buttons (+/–) until the parameter INT POS UP or INT POS DOWN appears.
The value stands at A.

☞ Press the button (P) to accept the current door position as the intermediate position.

☞ Save the intermediate position by pressing the (P) button again.

Exit Input operating mode

☞ Press and hold the buttons (+) and (–) simultaneously for more than 1 second.
Input is exited.

Change to automatic mode

☞ Press the (P) button until AUTOMATIC appears.

Note

If an intermediate position is to be corrected, the taught value can be changed in the INPUT menu or set to A again, so that a new teach-in can be started.

8. Programming

8.1 Overview of the LCD monitor

⚠ ATTENTION!

Property damage due to improper installation!
The display must be plugged in whilst de-energised. Only a standard LCD monitor (#91447) from Marantec Legden may be used.

8.1 / 1

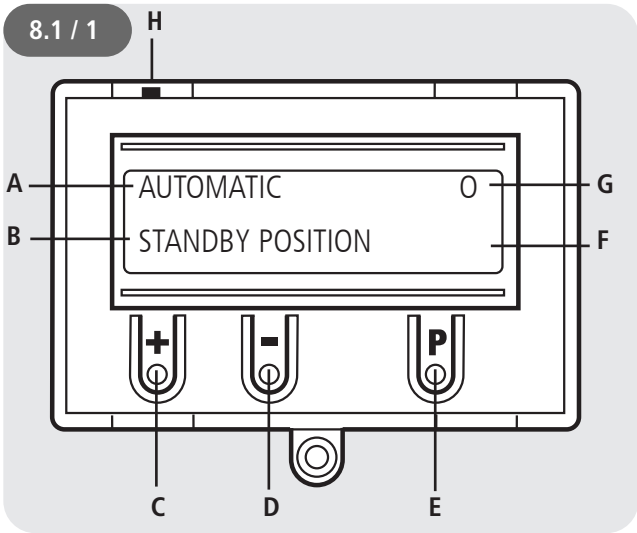

Explanation:

A: Operating mode / diagnostics info
B: Parameters / diagnostics info
C: (+) button
D: (–) button
E: (P) button
F: Value/status
G: Value/status
H: Jumper

If the jumper H is removed, the (+), (–) and (P) buttons no longer function.
The display continues to function.

After the controller has been switched on, it is in the initialisation phase. The display shows "PLEASE WAIT …". The controller is not ready for operation. The initialisation phase takes approx. 60 seconds after switching on for the first time.

8.2 LCD monitor operating modes

With the LCD monitor, the controller has four operating modes:

1. AUTOMATIC
2. ADJUSTMENT
3. INPUT
4. DIAGNOSIS

The operating modes ADJUSTMENT, INPUT and DIAGNOSIS are automatically exited 7 minutes after the last button was pressed.
The controller changes to AUTOMATIC mode.

Operating mode 1: AUTOMATIC
The door system is driven in AUTOMATIC mode.

Display:
– Display of the function being carried out
– Display of possible faults

If the "Self-locking" parameter is set to MOD2–7 or MOD9 in the input menu, the display switches from AUTOMATIC mode to MANUAL.

Operating mode 2: ADJUSTMENT
The UP and DOWN limit positions are set in ADJUSTMENT mode.

⚠ ATTENTION!

Risk of property damage due to improper operation of the controller!
When in ADJUSTMENT mode, there is no shutdown with the electronic limit position system (AWG) upon reaching the limit positions. The door can be damaged by running past the limit positions.

Fine adjustment can be implemented in INPUT mode.

Display:
– Displays the limit position value

Operating mode 3: INPUT
The values of various parameters can be changed in INPUT mode.

Display:
– Displays the selected parameter
– Displays the status/value set

Operating mode 4: DIAGNOSIS
Door-specific checks can be interrogated in DIAGNOSIS mode.

Display:
– Display of the check
– Display of the check status

8.3 Expert menu

Under factory settings (standard), only a few parameters appear in the INPUT operating mode, which can be adjusted by the operator. These setting parameters reflect the most frequently applied requirements for an industrial door system and are sufficient for commissioning in a standard situation. The last item in this list is the "EXPERT MENU" parameter. This is always set to OFF.

OFF: Limited number of parameter settings:

– Menu language
– INT POS UP
– OPEN TIME
– FOREWARNING TIME
– FAST CLOSE
– REVERSE OFF
– INPUT 1
– SELF LOCK
– BRAKE P OP
– BRAKE P CL
– SPEED OPEN
– SPEED CLOSE
– SOFTRUN OP.
– SOFTRUN CL.
– SPEED UP OP.
– SPEED UP CL.
– SLO. DO. OP.
– SLO. DO. CL.
– MOTOR V
– MOTOR I
– MOTOR P
– MOTOR PHI
– MOTOR HZ
– MOTOR RPM
– EXPERT MENU

Setting the EXPERT MENU parameter to ON activates the expert mode. It is now possible to call up and set all input menu parameters.
➔ „11.2 Input operating mode"

Note
– The expert mode is automatically exited after approx. 7 minutes, if no button is pressed. Now, only the limited selection of parameters is once again available until the EXPERT MENU parameter is set to ON again.
– The same applies to switching off the power. This once again sets the EXPERT MENU parameter to OFF.

8.4 RESET

The RESET function can be used to reset the control parameters to the pre-selected factory settings.
➔ „11.2 Input operating mode"

FACTORY SETTING parameter
Selection of the parameter set that should be reset with a RESET.

It is possible to implement different types of reset whereby more or less settings are reset.
➔ „11.2 Input operating mode"

RESET parameter
Part reset 1 :
All parameter settings are reset, apart from the settings for the frequency converter (only with CS 320 FU).

Part reset 2 :
All parameter settings are reset, apart from the settings for the limit positions and the detected limit position system.

Full reset :
Everything is reset to factory settings.
➔ „8.5 RESETTING the controller with LCD monitor"
➔ „8.6 RESETTING the controller without LCD monitor"

RES. INVERTER parameter

Reset all parameters of the frequency inverter to the factory settings. All other settings remain intact.

➔ „8.7 RESET the frequency inverter settings“

8.5 RESETTING the controller with LCD monitor

Changing to the INPUT operating mode

☞ Press (P) button until INPUT appears.

☞ Press and hold the buttons (+) and (–) simultaneously for more than 2 seconds to activate the input.

Resetting the controller

☞ Press the buttons (+/–) until the RESET parameter appears. The value stands at "OFF".

☞ Press the button (+) until MOD3 appears.

☞ Press (P) button to start the RESET.

The system runs through the initialisation phase and all connected safety components and the limit position system are automatically taught.

Change to adjustment mode

➔ „7.4 Setting the electronic limit position system via the LCD monitor“

Change to automatic mode

☞ Press (P) button until AUTOMATIC appears.

8.6 RESETTING the controller without LCD monitor

☞ Interrupt the supply voltage.

☞ Press and hold the circuit board buttons (P) and (–) at the same time.

☞ Switch the supply voltage back on.

☞ Press and hold the circuit board buttons (P) and (–) at the same time until the red LED (H6) flashes rapidly.

☞ Release the circuit board buttons (P) and (–).

The system then runs through the initialisation phase (approx. 60 seconds).
During initialisation, it is not possible to program or operate the system.
After initialisation is complete, the limit positions are deleted and all parameters are reset to factory settings.

8.7 RESET the frequency inverter settings

Change to input mode

☞ Press the (P) button until INPUT appears.

☞ Press and hold the buttons (+) and (-) simultaneously for more than 2 seconds to activate the input.

Perform a reset

☞ Press the (+/-) buttons until the RES.INVERTER parameter appears.
The value stands at "OFF".

☞ Press the (+) button until "ON" appears.

☞ Press the (P) button to start the RESET.

The initialisation phase runs and all settings on the frequency inverter are reset to factory settings.
The settings must now be performed again.

Change to automatic mode

☞ Press the (P) button until AUTOMATIC appears.

9. Frequency converter

9.1 General

The frequency converter control allows the door/gate speed to be adjusted separately for the OPEN and CLOSING directions. The frequency of the converter determines the operator speed. This speed-independent controlling of the door/gate system makes the door/gate run smoothly and protects the door/gate mechanism, resulting in benefits such as

- faster response times,
- reduced draughts, and
- minimised heating costs.

The acceleration and deceleration times (SPEED UP / SLOW DOWN) ensure soft starting and stopping at the end positions.

9.2 Adjustable values

The following is a list of parameter settings that are directly related to speed regulation through the frequency converter module.
Various graphs showing the process that takes place at the various settings are given by way of illustration.
➔ „9.3 Travel diagrams"

BRAKE P.OP. *(Brake point OPEN)*
Initiates the deceleration time SLOW DO. OP. The door/gate then continues at minimum speed $f_{SOFTRUN\ OP}$.
This parameter only appears in the menu when the end positions have been programmed, and it then appears as a negative value referred to the upper cut-out point.
This can only be set in the menu in conjunction with an absolute value encoder.
If mechanical limit switches are used, the before-end switch OPEN is used as a position marker for speed reduction.
Only applies for OPENING direction of door/gate travel

BRAKE P.CL. *(Brake point CLOSED)*
Initiates the deceleration time SLOW DO. CL. The door/gate then continues at minimum speed $f_{SOFTRUN\ CL}$.
This parameter only appears in the menu when the end positions have been programmed, and it then appears as a positive value referred to the lower cut-out point.
This can only be set in the menu in conjunction with an absolute value encoder.
If mechanical limit switches are used, the before-end switch CLOSE is used as a position marker for speed reduction.
Only applies for CLOSING direction of door/gate travel.

BRAKE P CL 2 *(Brake point CL 2)*
Allows the door/gate to close at 3 different speeds. The Brake point CL2 initiates the deceleration SLOW DO. MX. The door/gate movement then continues at normal speed $f_{SPEED\ CLOSE}$.
This parameter only appears in the menu when the end positions have been programmed, and it then appears as a positive value referred to the lower cut-out point.
This can only be set in the menu in conjunction with an absolute value encoder.
This function is not available if mechanical limit switches are used.
Only applies for CLOSING direction of door/gate travel.

SPEED OPE*N (normal OPENING speed)*
The normal OPENING speed for door/gate movement can be set here. Speed of travel $f_{SPEED\ OPEN}$.
Only applies for OPENING direction of door/gate travel

SPEED CLO*SE (normal CLOSING speed)*
The normal CLOSING speed for door/gate movement can be set here. Speed of travel $f_{SPEED\ CLOSE}$.
Only applies for CLOSING direction of door/gate travel.

MX SPEED CL. *(maximum CLOSING speed)*
The maximum speed for door/gate CLOSING movement can be set here. Speed of travel $f_{MX\ SPEED\ CL}$.
This parameter only appears in the menu when Brake point 2 has been programmed, and it then appears as an option. This allows two different fast speeds and one slow speed to be set in the CLOSING direction.
Only applies for CLOSING direction of door/gate travel.

SOFTRUN OP. *(minimum OPENING speed)*
The minimum speed for door/gate OPENING movement can be set here. Speed of travel $f_{SOFTRUN\ OP}$.
Only applies for OPENING direction of door/gate travel

SOFTRUN CL. *(minimum CLOSING speed)*
The minimum speed for door/gate CLOSING movement can be set here. Speed of travel $f_{SOFTRUN\ CL}$.
Only applies for CLOSING direction of door/gate travel.

SPEED UP OP. *(Speed up OPENING)*
The acceleration time that elapses between the starting command and reaching the normal speed $f_{SPEED\ OPEN}$.
Only applies for OPENING direction of door travel.

SPEED UP CL. *(Speed up CLOSING)*
The acceleration time that elapses between the starting command and reaching the normal speed $f_{SPEED\ CLOSE}$.
Only applies for OPENING direction of door/gate travel.

SLOW DO. OP. *(Slow down OPENING)*
Sets the time that elapses between the Brake point OPEN and reaching the minimum speed $f_{SOFTRUN\ OP}$.
Only applies for OPENING direction of door/gate travel.

SLOW DO. CL. *(Slow down CLOSING)*
Sets the deceleration time that elapses between Brake point CLOSE and reaching the minimum speed $f_{SOFTRUN\ CL}$.
Only applies for CLOSING direction of door/gate travel.

SPEED UP MX (Speed up MAX CLOSING)
Sets the time that elapses between the starting command and reaching the maximum speed $f_{MX\ SPEED\ CL}$.
This parameter only appears in the menu when Brake point 2 has been programmed, and it then appears as an option. This allows acceleration to a second (optional) fast speed to be set in the CLOSING direction.
Only applies for CLOSING direction of door/gate travel.

SLOW DO. MX *(Slow down MAX CLOSING)*
Sets the time that elapses between the Brake point CL 2 and reaching the normal speed $f_{SPEED\ CLOSE}$.
This parameter only appears in the menu when Brake point 2 has been programmed, and it then appears as an option. This allows deceleration in the CLOSING direction to be set from a second (optional) fast speed to a normal speed $f_{SPEED\ CL}$.
Only applies for CLOSING direction of door/gate travel.

Reversal of direction by pressing the OPEN or CLOSE button
Depending on the current speed and direction of travel, reversal of the direction by directly pressing the OPEN or CLOSE buttons will result in SLOW DO. OP. / CL. / MX and SPEED UP OP. / CL. / MX being run through.
The total time for reversing the direction is made up of SLOW DO. OP. / CL. / MX (INPUT menu) and SPEED UP OP. / CL. / MX.

Reversal of direction by triggering the closing edge safety device
The parameter SLOW DO. SKS / SPEED UP SKS describe the procedures after triggering the closing edge safety device and the associated direct reversal of direction.
The total time for reversing the direction is made up of SLOW DO. SKS, reversal time (INPUT menu) and SPEED UP SKS

SLOW DO. SKS *(Slow down SKS)*
Sets the time that elapses between triggering the closing edge safety device and stopping the door/gate system.
The countdown for the pre-set reversal time then begins.
Applies for both directions of door/gate travel.

SPEED UP SKS *(Speed up SKS)*
Sets the time that elapses between expiry of the reversal time and reaching the normal speed $f_{SPEED\ OPEN/CLOSE}$.
Applies for both directions of door/gate travel.

Reversal of direction by triggering the photocell (drive-through)
The parameter SLOW DO. LB / SPEED UP LB describe the procedures after triggering the photocell system and the associated direct reversal of direction.
The total time for reversing the direction is made up of SLOW DO. SKS, reversal time (INPUT menu) and SPEED UP LB.

SLOW DO. LB *(Slow down LB)*
Sets the time that elapses between triggering the closing edge safety device and stopping the door/gate system.
The countdown for the pre-set reversal time then begins.
Applies for both directions of door/gate travel.

SPEED UP LB *(Speed up LB)*
Sets the time that elapses between expiry of the reversal time and reaching the normal speed $f_{SPEED\ OPEN/CLOSE}$.
Applies for both directions of door/gate travel.

Stopping the door/gate system with the stop button or the impulse sequence

SLOW DO. STOP (*Slow down STOP)*
Sets the time that elapses between pressing the stop button or the impulse sequence and stopping the door/gate system.
Applies for both directions of door/gate travel.

9.3 Travel diagrams

Door/gate opening run with two speeds

9.3 / 1

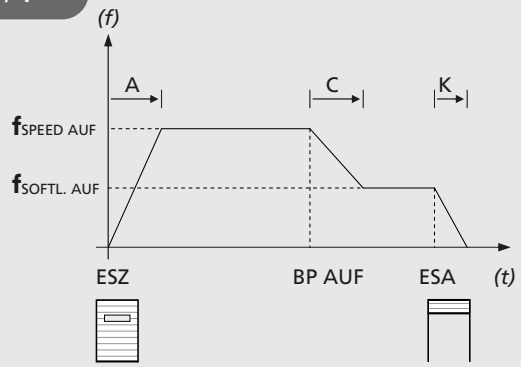

Door/gate closing run with two speeds

9.3 / 2

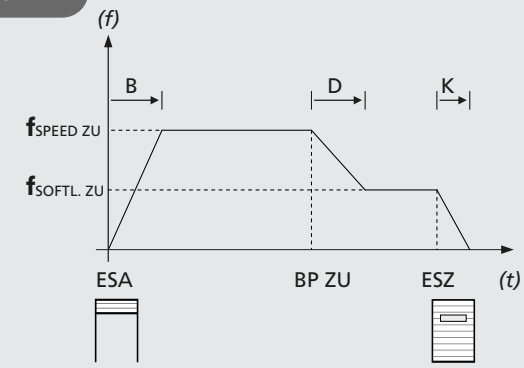

Door/gate closing run with three speeds

9.3 / 3

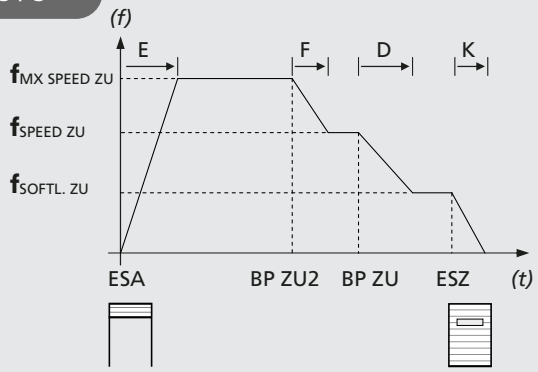

Reversal of direction with OPEN / CLOSE button

9.3 / 4

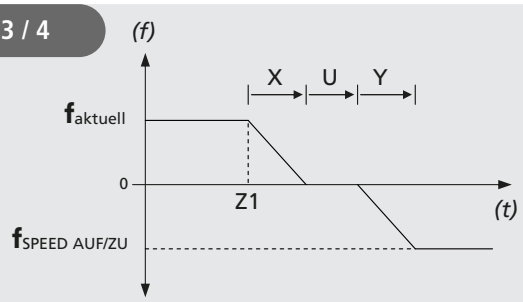

Reversal of direction with closing edge safety device

9.3 / 5

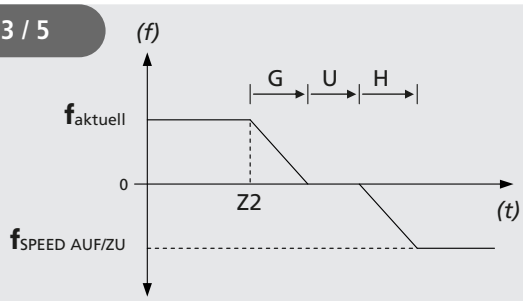

Reversal of direction with photocell

9.3 / 6

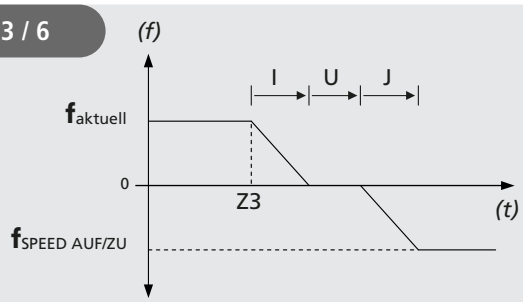

Operating stop with stop button or impulse sequence

9.3 / 7

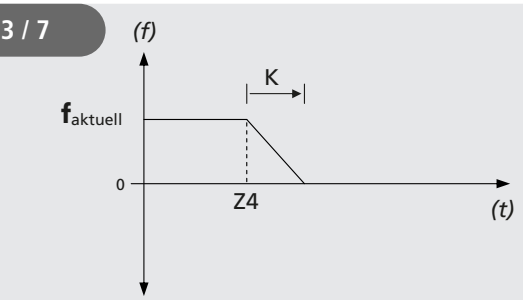

Key

(f)	Frequency
(t)	Time
ESA	Upper limit switch, OPEN
ESZ	Lower limit switch, CLOSE
BP AUF	Brake point OPEN
BP ZU	Brake point CLOSED
BP ZU 2	Brake point CLOSED 2
$f_{SPEED\ AUF}$	Frequency SPEED OPEN
$f_{SOFTL.\ AUF}$	Frequency SOFTRUN OPEN
$f_{SPEED\ ZU}$	Frequency SPEED CLOSE
$f_{MX\ SPEED\ ZU.}$	Frequency MX SPEED CL
$f_{SOFTL.\ ZU}$	Frequency SOFTRUN CL.
$f_{aktuell}$	Current operating frequency
$f_{SPEED\ AUF/ZU}$	Frequency SPEED OPEN or SPEED CLOSE
A	SPEED UP OP.
B	SPEED UP CL.
C	SLOW DO. OP.
D.	SLOW DO. CL.
E	SPD. UP MX
F	SLO. DO. MX
G	SLOW DO. SKS
H	SPEED UP SKS
I	SLOW DO. LB
J	SPEED UP LB
K	SLOW DO. STOP
U	Reversal time The reversal time can be set in the INPUT menu item
X	SLOW DO. OP./CL. or SLOW DO. MX
Y	SPEED UP OP./CL. or SPD. UP MX
	The current operating frequency determines whether slow down/speed up OP./CL. or MX applies.
Z1	Button pressed
Z2	SKS closing edge safety device triggered
Z3	Photocell triggered
Z4	Stop triggered

9.4 Rated values for motor

In INPUT operating mode, certain motor rating data can be set. It is essential that these settings agree with the information given on the motor type plate. Although these are factory pre-set when supplied in combination with a door/gate operator, it must be checked before using them for the first time whether the settings comply with the information given on the type plate. It is essential that the following data is checked and set:

MOTOR V	Rated voltage of motor
MOTOR I	Rated current of motor
MOTOR P	Rated power of motor
MOTOR PHI	Power factor of motor
MOTOR I	Rated frequency of motor
MOTOR RPM	Rated speed of motor

In addition, it is possible to set the limits for the minimum and maximum operating frequency of the motor. The parameters required for this purpose can also be found in INPUT operating mode:

MOT.HZ MIN	Lowest programmable operating frequency
MOT.HZ MAX	Highest programmable operating frequency

The maximum programmable operating frequency of a motor is determined by the manufacturer and must be individually checked and set.

⚠ ATTENTION!

Damage can occur through improper installation!
Incorrectly entering the parameter settings described can result in considerable damage occurring to the control unit and motor.

10. Navigator (only LCD monitor)

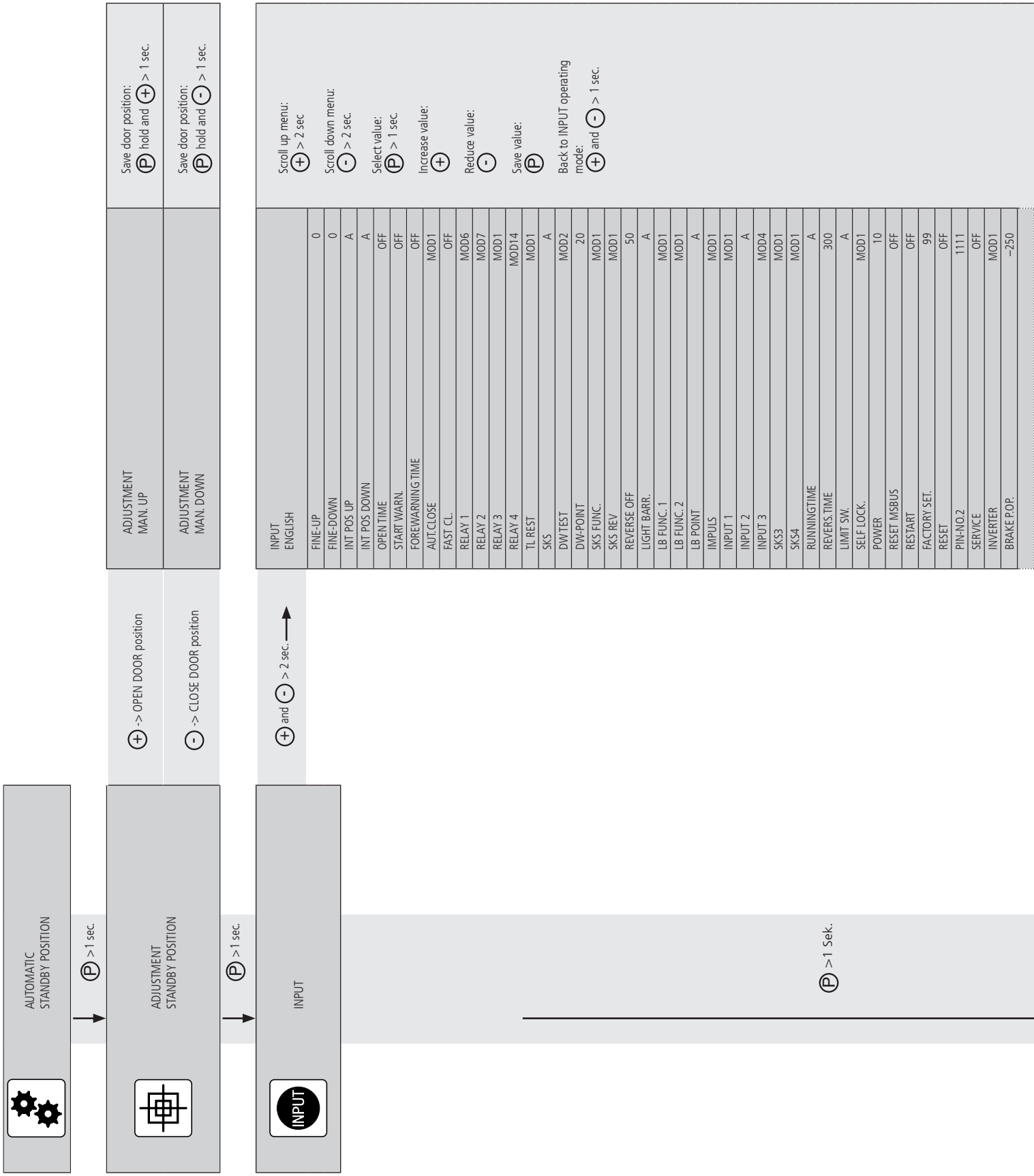

BRAKE P.CL.	250
BRAKE P.CL.2	A
SPEED OPEN	50
SPEED CLOSE	50
MX SPEED CL.	50
SOFTRUN OP.	25
SOFTRUN CL.	25
SPEED UP OP.	2.0
SPEED UP CL.	2.0
SLOW DO. OP.	2.0
SLOW DO. CL.	2.0
SPEED UP MX	2.0
SPEED DO. MX	2.0
SPEED UP SKS	0.5
SLOW DO. SKS	0.1
SPEED UP LB	0.5
SLOW DOWN LB	0.5
SLOW DO. STOP	0.5
RES.INVERTER	OFF
MOTOR V	230
MOTOR I	5.1
MOTOR P	550
MOTOR PHI	0.69
MOTOR HZ	50
MOTOR RPM	1370
MOTOR HZ MIN	10
MOTOR HZ MAX	87
BRAKE DELAY	50
BOOST CONT.	50
BOOST RUN UP	50
BOOST START	0
EXPERT MENU	OFF

DIAGNOSE

UPPER SWITCH	ON
LOWER SWITCH	ON
UP-SWITCH	OFF
DOWN-SWITCH	OFF
INPUT 1	OFF
INPUT 2 / SKS OP. 2 / SAFE. 2	– / ON / OFF
INPUT 3	– / OFF
SKS	ON
SKS 3 / SAFE: 3	– / ON
SKS 4 / SAFE: 4	– / ON
IMPULS	OFF
TIMER	OFF
LIGHT BARR.	ON
LIGHT BARR. 2	ON
SAFETY CIRC.	ON
STOP	ON
ROT FIELD	Right
CYCLE	000000
SERVICE	OFF
AWG	0000
C.STOP	0000
C.OPENED	0000
C.O.BTN	0000
Error memory	Error …

Scroll up menu:
(+) > 2 sec

Scroll down menu:
(-) > 2 sec.

Back to AUTOMATIC operating mode:
(P)

Only interrogation possible

11. Functional overviews

11.1 Automatic mode

Display	Description
AUTOMATIC TEACH IN RUN	The run-time is taught automatically.
AUTOMATIC OPENING	The door is currently in the opening phase.
AUTOMATIC CLOSING	The door is currently in the closing phase.
AUTOMATIC STANDBY POSITION	The door is currently in an intermediate position.
AUTOMATIC STANDBY POSITION O	The door is in the UP limit position.
AUTOMATIC STANDBY POSITION o	The door is in the Sect. UP position ("intermediate position UP" parameter).
AUTOMATIC STANDBY POSITION U	The door is in the DOWN limit position.
AUTOMATIC STANDBY POSITION u	The door is in the Sect. DOWN position ("intermediate position DOWN" parameter).
AUTOMATIC STANDBY POSITION r	The door is in the reverse shut-off position.
AUTOMATIC STOP	The command button STOP (cover keypad CS) was pressed for longer than 5 seconds.
AUTOMATIC PERMANENT INPUT	When the power is switched off, an active signal (NO) is detected at the UP, DOWN, pulse or programmable input 1 (with use of I/O BUS modules, also inputs 11-14 or 15-18). This always constitutes an impermissible state. The cause is probably a defective component that must be replaced. Exception: The signal comes from a pluggable timer or the programmable input 1 if this is set as a timer function (MOD4), or fire alarm function (MOD5-9, 13).
AUTOMATIC CRASH SENSOR	The door system crash sensor has been activated (connection to X4/9-10, programmable input 1, MOD18). A vehicle (e. G. forklift truck) has possibly driven into the closed door.
SERVICE STANDBY POSITION	The pre-selected service interval has been reached.

If the "Self-locking" parameter is set to MOD2-7 or MOD9 in the input menu, the display switches from AUTOMATIC mode to MANUAL.

Display	Description
MANUAL MAN. UP	The door is currently in the opening phase.
MANUAL MAN. DOWN	The door is currently in the closing phase.
MANUAL STANDBY POSITION	The door is currently in an intermediate position.

11.2 Input operating mode

INPUT

Function	Description	Adjustment options	Factory setting
DEUTSCH	Selection of the menu language. **Only with LCD monitor:** The menu language can also be selected during the initialisation phase (during first commissioning or after a reset). The factory pre-set menu language (ENGLISH) appears here for approx. 60 seconds as flashing text in the display. At this time it is possible to change the menu language during the initialisation phase. You can scroll through the language choices by pressing the [+] or [–] buttons. Save the desired language with the [P] button. All texts / messages are subsequently displayed in the selected language.	DEUTSCH ENGLISH FRANCAIS NEDERLANDS DANSK ESPANOL POLSKI CESKY ITALIANO SUOMI SVENSKA TÜRKÇE NORSK MAGYARUL	DEUTSCH
FINE-UP	Fine adjustment of the UP limit position in relation to the saved limit position (UP SWITCH). Only visible with electronic limit position system.	-250 – 250	0
FINE-DOWN	Fine adjustment of the DOWN limit position in relation to the saved limit position (DOWN SWITCH). Only visible with electronic limit position system.	-250 – 250	0
INT POS UP	Setting the switching point UP intermediate position (Sect. UP) in relation to the saved limit position UP. Display as a negative value. Only visible with electronic limit position system. Automatic teach-in of the position: ➔ „7.5 Setting the intermediate positions of the electronic limit position system via the LCD monitor"	A (teaching) -1 – DOWN SWITCH	A
INT POS CLOSED	Setting the switching point DOWN intermediate position (Sect. DOWN) in relation to the saved limit position DOWN. Display as a positive value. Only visible with electronic limit position system. Automatic teach-in of the position: ➔ „7.5 Setting the intermediate positions of the electronic limit position system via the LCD monitor"	A (teaching) 1 – UP SWITCH	A
OPEN TIME	After opening, the door automatically travels in the DOWN direction after the set value has passed. **Note:** Pressing the DOWN button during the open time starts the closing operation immediately. Pressing the UP or STOP button during the open time restarts the time. If an automatic closing operation is interrupted by the closing edge protective device, the open time is added to every new attempt. After 3 attempts, automatic closing is cancelled.	OFF, 1 – 3600 seconds	OFF
START WARN.	The start-up warning is implemented before **every** run.	OFF, 1 – 10 seconds	OFF
FOREWAR-NING TIME	The warning time is activated before automatic downward travel or closing through pulse operation. **Note:** This time is added to the start-up warning	OFF, 1 – 300 seconds	OFF

Functional overviews

Function	Description	Adjustment options	Factory setting
AUT.CLOSE	Automatic closing after the open time has elapsed. MOD1: AUT.CLOSE from UP limit position MOD2: AUT.CLOSE from Sect. UP limit position MOD3: AUT.CLOSE from UP limit position and Sect. UP limit position MOD4: AUT.CLOSE from *all* door positions	MOD1 – MOD4	MOD1
FAST CL.	Premature closing after passing through the light barrier. **Prerequisite:** Connection of a light barrier at pass through-height and setting of an open time > 0. With open time = 0 the door closes directly after passing through the light barrier. MOD2: The open time is cancelled after passing through the light barrier (system shuts immediately). If passing through the light barrier occurs during opening, the programmed open time is ignored and the door closes directly. MOD3: The open time is cancelled after passing through the light barrier for a minimum duration of 2 seconds (personnel suppression). If passing through the light barrier occurs during opening, the programmed open time is ignored and the door closes directly. MOD4: Like MOD2, but the light barrier does not function during opening.	OFF, MOD2 – MOD4	OFF
RELAY 1	All 4 relays can be assigned a relay mode from 1 – 13, 17 – 19, 21 – 46, 49 and 60 – 62. Relay 4 can also be programmed with MOD14 – 16. Further explanations: ➔ „11.3 Explanations of the relay modes:“ on page 51 MOD1: (Red traffic light inside 1) forewarning - flashing, door running - illuminated MOD2: (Red traffic light inside 2) forewarning - flashing, door running - flashing MOD3: (Red traffic light inside 3) forewarning - illuminated, door running - illuminated MOD4: Pulse signal with UP command from inside MOD5: Fault message MOD6: UP limit position MOD7: DOWN limit position MOD8: UP limit position negated MOD9: DOWN limit position negated MOD10: Intermediate position UP MOD11: Intermediate position DOWN MOD12: Intermediate position DOWN to end position DOWN MOD13: Magnetic lock function MOD14: Brake (closed-circuit current principle) MOD15: Brake (open-circuit current principle) MOD16: Brake (closed-circuit current principle) applied in UP end position MOD17: SKS actuated or test error MOD18: (Red traffic light 4) forewarning - flashing, door running - off MOD19: Intermediate position UP to end position UP MOD21: Test of the trap-in protection before opening (additional module required) MOD22: Activation of transmission system radio 1 and 3, or testing light grid MOD23: (Green traffic light) limit position UP - illuminated, forewarning - OFF, door running - OFF* MOD24: Capacitor switching for sectional door drives 230V/1~ MOD25: Courtyard light function, 2 minutes illuminated after UP/pulse - command MOD26: Activation of transmission system radio 2 MOD27: Pulse signal after reaching UP end position MOD28: Relay general OFF MOD29: Door drives open MOD30: Door drives closed MOD31: Service, continuous signal after reaching the set service interval MOD32: Battery operation MOD33: No battery operation MOD34: BMA signal (fire alarm signal active) MOD35: Light barrier in function MOD36: Locking cylinder slip door	MOD1 – MOD13 MOD17 – MOD19 MOD21 – MOD46 MOD49 MOD60 – MOD62	MOD6
RELAY 2		MOD1 – MOD13 MOD17 – MOD19 MOD21 – MOD46 MOD49 MOD60 – MOD62	MOD7
RELAY 3		MOD1 – MOD13 MOD17 – MOD19 MOD21 – MOD46 MOD49 MOD60 – MOD62	MOD1
RELAY 4		MOD1 – MOD19 MOD21 – MOD46 MOD49 MOD60 – MOD62	MOD43

Function	Description	Adjustment options	Factory setting
	MOD37: Testing stop signal transmission system radio 1 and 3 MOD38: Testing light grid 2 (input 2) MOD39: Error LED MOD40: Pulse signal with UP command from outside MOD41: Test transmission system radio 4 in UP direction MOD43: Drive moving MOD44: (Red traffic light inside + outside) . . . . . DOWN door movement from intermediate position DOWN - flashing . . . . . UP door movement - off MOD45: Closing edge in function MOD46: Controller in operating mode ADJUSTMENT MOD49: Testing presence and movement sensors (NC) MOD60: (Red traffic light outside 1) forewarning - flashing, door running - illuminated MOD61: (Red traffic light outside 2) forewarning - flashing, door running - flashing MOD62: (Green traffic light outside) limit position UP - illuminated, forewarning/door running - off		
TL REST	Switch traffic lights MOD1: off in standby position MOD2: on in standby position MOD3: off after 5 minutes when in standby position	MOD1 – MOD3	MOD1
SKS	MOD1: OSE (photo sensor) MOD2: 8.2kΩ (electric contact strip) MOD3: DW (pressure wave strip) as NC with testing MOD4: Light grid OSE without testing MOD5: Light grid SSR or PNP with testing MOD6: Light grid SSR or PNP without testing MOD7: 2-wire OSE (photo sensor with 2 connection wires) **NOTE:** MOD4, MOD5 and MOD6 must be set manually when using a light grid. – Without addition of the open time (if programmed) after interruption of the light grid during the automatic closing. – Without switch-off of the function “Automatic closing” after 3 interruptions in succession.	A (teaching) MOD1 – MOD7	A
DW TEST	Activation and deactivation of the test function for the connected pressure wave strip. Only appears when setting parameter SKS = MOD3. MOD1: Test OFF MOD2: Test ON	MOD1 – MOD2	MOD2
DW-POINT	Point at which the connected pressure wave strip (X4 / 5+6) is tested. Only appears when setting parameter SKS = MOD3. Setting in increments (only AWG), starting from bottom limit switch-off point. In the case of systems with mechanical limit switches, the supplementary limit switch DOWN serves as a DW-Point.	0 – 1000	20
SKS FUNC.	MOD1: Stop + reversing MOD2 Stop + rev for 2 seconds	MOD1 – MOD2	MOD1
SKS REV	MOD1: Stop + reversing between limit position UP and reversing point Stop between reversing point and limit position DOWN ➜ for vertically closing doors MOD2 Stop + reversing between limit position UP reversing point No action between reversing point and limit position DOWN ➜ for vertically closing doors with leading light barrier MOD3: Stop + reversing between limit position UP and limit position DOWN ➜ for horizontally closing doors and systems with mechanical limit switches without pre-limit switch **NOTE:** In the case of systems with mechanical limit switches the supplementary limit switch DOWN serves as reversing point.	MOD1 – MOD3	MOD1

Functional overviews

Function	Description	Adjustment options	Factory setting
REVERSE OFF	Reversing point. Point at which the reversing of the door is switched off. Only appears with systems with an electronic limit position system (AWG). Setting in increments, starting from bottom limit switch-off point. In the case of systems with mechanical limit switches, the supplementary limit switch DOWN serves as reversing point.	A (teaching) 1 – 1000	50
LIGHT BARR. 1	Light barrier 1, with or without testing, mounted in passage area of the door. Connection to X4 / 1-4. The respective system connected is automatically detected and taught. ➔ Wiring diagrams „9. Frequency converter" on page 34 MOD1: 2-wire-system (Marantec Legden) with testing MOD2: 3-wire-system NPN without testing MOD3: 3-wire-system PNP without testing 4-wire-system NC contact without testing MOD4: 3-wire-system NPN with testing MOD5: 3-wire-system PNP with testing 4-wire-system NC contact with testing **NOTE:** If a 3- or 4-wire-system is operated with testing, the respective MOD (4 or 5) must be set manually.	A (teaching) MOD1 – MOD5	A
LB FUNC. 1	Function of the light barrier 1 in passage area of the door. **DOWN door movement** / **UP door movement** MOD1: Stop + reversing / No action MOD2: Stop + rev / No action MOD3: STOP / No action MOD4: STOP / STOP MOD5: Stop + reversing / Ride-along suppression (UP door movement only possible if the light barrier is clear). MOD6: No action / Stop + reversing MOD7: No action / Stop + rev MOD8: No action / Stop MOD9: Ride-along suppression (DOWN door movement only possible, if the light barrier is clear). / Stop + reversing	MOD1 – MOD9	MOD1
LB FUNC. 2	Function of the light barrier 2 in passage area of the door. Only appears when setting parameter INPUT 1 = MOD15. Connection only as NC contact via programmable input 1 (X4 / 9+10). Selection mode analogous to the settings under LB FUNC. 1	MOD1 – MOD9	MOD1
LB POINT	Between limit position DOWN and LB POINT, the light barrier 1 (X4 / 1-4) is not evaluated. Setting in increments, starting from bottom limit switch-off point. Only appears with systems with an electronic limit switch. **Note:** At the first approach during adjustment, this point is automatically detected, provided that light barrier 1 is mounted in the door frame and remains interrupted during the downward travel from this point to the limit position DOWN.	A (teaching) 1 – UP SWITCH	A
IMPULS	Selection of a function that should be assigned to the impuls button (X3 / 7+8). MOD1: UP - STOP - DOWN - STOP - UP … (sequential control) MOD2: UP when door is stationary / no action during UP movement Stop and run open with DOWN movement MOD3: UP when door is stationary / STOP with door movement MOD4: UP when door is stationary / no action with door movement MOD5: UP when door is stationary / DOWN from UP limit position	MOD1 – MOD5	MOD1

Function	Description	Adjustment options	Factory setting
INPUT 1	Selection of a function that should be assigned to input 1 (X4 / 9+10). MOD1: Button Sect. UP . . . . . **NO** MOD2: Switch Sect. UP . . . . . **NO** MOD3: Switch auto CL. . . . . **NO** MOD4: External CLOCK (permanent UP) . . . . . **NO** MOD5: Switch BMA 3 (Sect. opening) . . . . . **NO** MOD6: Switch BMA 1 (emergency closing) . . . . . **NO** MOD7: Switch BMA 1 (emergency closing) . . . . . **NC** MOD8: Switch BMA 2 (emergency opening) . . . . . **NO** MOD9: Switch BMA 2 (emergency opening) . . . . . **NC** MOD10: Button ventilation function (Sect. opening) . . . . . **NO** MOD11: Button automatic closing. . . . . **NO** MOD12: Laser scanner (height detection) . . . . . **NO** MOD13: Switch BMA 3 (Sect. opening) . . . . . **NC** MOD14: Slip door locking . . . . . **NO** MOD15: Light barrier 2 . . . . . **NC** MOD16: Forewarning switch . . . . . **NO** MOD17: Impuls button . . . . . **NO** MOD18: Crash sensor . . . . . **NC** MOD19: Lock operation commands via LCD monitor . . . . . **NC** MOD22: Monitoring an external load contactor . . . . . **NO** MOD30: UP switch inside . . . . . **NO** MOD31: UP switch outside . . . . . **NO** MOD32: DOWN switch . . . . . **NO** (only active with functioning closing edge protective device and functioning light barrier 1. No function in dead-man's operation.)	MOD1 – MOD19 MOD22 MOD30 – MOD32	MOD1
INPUT 2	Selection of a function that should be assigned to input 2 (X4 / 11+12). OFF: NOT active MOD2: Safety switching with resistance evaluation . . . . . **xx Ω** MOD3: Switching strip – active in UP direction . . . . . **8.2 kΩ** Stops and reverses with actuation MOD4: Switching strip – active in UP direction . . . . . **8.2 kΩ** Stop and rev with actuation MOD5: Battery operation . . . . . **NO** MOD6: Radar movement detector (height detection) . . . . . **NO** MOD7: Light grid 2 (SSR / PNP) with testing . . . . . **NC** MOD9: Safety element - STOP with deviation . . . . . **OSE** MOD10: Switching strip – active in UP direction . . . . . **OSE** Stops and reverses with actuation MOD11: Switching strip – active in UP direction . . . . . **OSE** Stop and rev (2 sec.) with actuation MOD12: Light grid 2 without testing . . . . . **OSE** With first commissioning and after a reset, input 2 is set to A - self-teaching once. If a resistance value is detected, MOD2 (safety input 5.14) is automatically set and the measured value is stored and monitored as a reference for the connected safety-related components. A single switching strip 8.2 kOhm (MOD 3/4) must be manually activated. If no connected component is detected during initial commissioning or after a reset, the input is automatically deactivated. OFF appears in the display and the input must be manually activated.	A (teaching) OFF MOD2 – MOD12	A
INPUT 3	Selection of a function that should be assigned to input 3 (X10/1-3). MOD4: Week timer MOD21: Brake actuation monitoring MOD22: (analogous to input 1/MOD22) **NOTE:** If MOD14 - 16 is set at relay 4, MOD 21 (brake monitoring) is automatically set at input 3. This setting cannot be changed if the brake mode is active.	MOD4 / MOD21/ MOD22	MOD4

Functional overviews

Function	Description	Adjustment options	Factory setting
SKS3	Setting for channel 1 of the pluggable signal transmission system (X20). OFF: Not active MOD2: Activates as closing edge protection in DOWN direction. MOD3: Activates as closing edge protection in UP direction. MOD4: Activates as safety device (internal safety circuit) If the pluggable component of the signal transmission system is plugged into X20, the controller recognises this (only during initial commissioning or after a reset) and the parameter is automatically set to MOD4.	A - (teaching) OFF MOD2 – MOD4	A
SKS4	Setting for channel 2 of the pluggable signal transmission system (X20). Selection mode analogous to the settings under SKS 3.	A - (teaching) OFF MOD2 – MOD4	A
RUNNING-TIME	Monitoring the maximum running time of an UP or DOWN movement. During the teach-in run, the runtime of the door is learned automatically. If the deviation is 20% (in both directions), a runtime error appears. After automatic teach-in, the runtime can be changed manually.	A (teaching) OFF 1 – 300 seconds	A
REVERS.TIME	Motor standstill time with each direct change of direction. The reversal time when the safety edge is activated during the closing movement is one quarter of the set time.	100 – 5000 milliseconds	300
LIMIT SW.	Selection of the limit position system to be evaluated. MOD1: Absolute value encoder (AWG) MOD2: Mechanical limit switches (MEC) MOD4: only for frequency converter operation MOD5: Absolute value encoder (AWG) + mechanical limit switch DOWN (NC) with standard installation MOD6: Absolute value encoder (AWG) + mechanical limit switch DOWN (NC) with special installation with left rotating field **MOD 5+6 (optional):** Here an additional external mechanical limit switch is set to query the lower end point in order to compensate for tolerances caused by the door mechanism and/or the door curtain. As soon as the mechanical limit switch is actuated, the lower end position is considered reached, regardless of the information from the absolute encoder.	A (teaching) MOD1 – MOD2 MOD4 – MOD6	A
SELF LOCK	Selection between pulse operation and manual operation (dead man) with or without evaluation of closing edge safety device (SKS) and light barrier system (LB). MOD1: Pulse operation for OPEN + CLOSE with SKS and LB With defective safety equipment, switch over to manual operation. MOD2: Manual operation for OPEN + CLOSE with SKS and LB MOD3: Manual operation for CLOSE, pulse operation for OPEN, with SKS and LB MOD4: Manual operation for OPEN, pulse operation for CLOSE, with SKS and LB MOD5: Manual operation for OPEN + CLOSE without SKS and LB MOD6: Manual operation for CLOSE, pulse operation for OPEN, without SKS and LB MOD7: Manual operation for OPEN + CLOSE with SKS and LB STOP upon reaching the intermediate position CLOSE. By pressing the button again, continued travel to end position CLOSED is possible. MOD8: Pulse operation for OPEN + CLOSE with SKS and LB With defective safety equipment, switch over to manual operation only via circuit board button MOD9: Manual operation for OPEN + CLOSE with SKS and LB With defective safety equipment, operation only via circuit board button.	MOD1 – MOD9	MOD1

Function	Description	Adjustment options	Factory setting
POWER	**Automatic power monitoring** (Monitoring of the rotational speed) Fault message in the event of the door being difficult to move or blocked. Adjustment of the sensitivity for OPEN direction. A value for the force (rotational speed) will be displayed during opening. With the power monitoring active, the value must be set to a lower value than the lowest value shown during the door travel. The greater the difference to the lowest displayed value, the less sensitive the reaction of the power monitoring. The power monitoring is only activated if the numeric value is set.	OFF 1 – 999	10
RESET MSBUS	All assigned MSBUS addresses are reset. After a controller restart, re-addressing of all connected MSBUS devices takes place. ➔ For detailed information refer to the manual for the MSBUS device.	ON OFF	OFF
RESTART	With activation of the function, the controller is restarted.	ON OFF	OFF
FACTORY SET.	Selection of the parameter set that should be reset with a RESET. MOD5: Marantec Legden S ➔ Drives in dead man operation MOD6: Marantec Legden FU ➔ Drive series MDF-U (integrated UPS) MOD7: Marantec Legden S ➔ Drive series STAW with increased switch-on duration MOD8: Marantec Legden FU ➔ Drive series MTZ 05 (230V) MOD9: Marantec Legden FU ➔ Drive series STA MOD14: Marantec Legden FU ➔ Drive series MTZ 05 (400V) MOD28: Marantec Legden S ➔ Standard with brake actuation MOD31: Marantec Legden S ➔ Dead-mans function, not resettable MOD32: Marantec Legden DUO ➔ DUO-system, 2 drives MOD99: Marantec Legden S ➔ Standard MOD10 – MOD13 / MOD 15 – MOD97: Customer-specific parameter sets	MOD5 – MOD99	MOD99
RESET	Reset control parameters to the pre-selected factory settings. MOD1: Part reset 1 (everything apart from frequency converter settings) MOD2: Part reset 2 (everything apart from limit positions / known limit position system) MOD3: Complete reset (everything is reset to factory settings)	OFF, MOD1 – MOD3	OFF
PIN no. 2	Input and selection of a PIN code for programming a service interval. After inputting the PIN code, the second programming level opens. Afterwards, a service interval can be entered via the SERVICE parameter. Input level 2 disappears again after the voltage is switched off, or automatically after 10 minutes. A change to the PIN code can only take place in the second programming level.	0 – 9999	1111
SERVICE	OFF: Service display not active Setting a service interval. After the set load cycles are complete, a service message is issued (LED / LCD). If a relay output is programmed with MOD31, the respective relay (continuous signal) switches. Only appears after activation of input level 2 via parameter PIN no. 2.	OFF 0 – 99950	OFF
INVERTER	Activates or deactivates a connected frequency converter. By connecting a frequency converter to interface X18 the controller becomes an CS 320 FU. ➔ For detailed information refer to the manual for the CS 320 FU. MOD1: Operation without frequency converter MOD2: Operation with frequency converter MOD3: Operation with frequency converter (effective ramp times)	MOD1 – MOD3	MOD1
BRAKE P.OP.*	Initiates the deceleration time SLOW DO. OP. Display in absolute value encoder increments as a negative value in relation to the upper end switch-off point. *Only applies for OPENING direction of door travel.*	-999 – 0	-250

Functional overviews

Function	Description	Adjustment options	Factory setting
BRAKE P.CL.*	Initiates the deceleration time SLOW DO. CL. Display in absolute value encoder increments as a positive value in relation to the lower end switch-off point. *Only applies for CLOSING direction of door travel.*	0 – 999	250
BRAKE P.CL.2*	Initiates the delay time DO. MX. Display in absolute value encoder increments as a positive value in relation to the lower end switch-off point. If the end positions are changed again (e.g. fine adjustment), the BP2 is deactivated again (display A) and must be re-programmed. *Only applies for CLOSING direction of door travel.* ** Parameters appear only after programming the end positions*	0 - UPPER SWITCH (0 - LOWER SWITCH)	A
SPEED OPEN	Normal speed for OPENING door movement.	MOT.HZ MIN - MAX	50 Hz
SPEED CLOSE	Normal speed for CLOSING door movement.	MOT.HZ MIN - MAX	50 Hz
MX SPEED CL.	Maximum speed for CLOSING door movement (optional). Parameter appears only after programming BRAKE P. CL.2.	MOT.HZ MIN - MAX	50 Hz
SOFTRUN OP.	Minimum speed for OPENING door movement.	MOT.HZ MIN - 50 Hz	25 Hz
SOFTRUN CL.	Minimum speed for CLOSING door movement.	MOT.HZ MIN - 50 Hz	25 Hz
SPEED UP OP.	Acceleration time between starting command and SPEED OPEN frequency. *Only applies for OPENING direction of door travel.*	0.1 – 9.9 s	2.0 s
SPEED UP CL.	Acceleration time between starting command and SPEED CLOSE frequency. *Only applies for CLOSING direction of door travel.*	0.1 – 9.9 s	2.0 s
SLOW DO. OP.	Deceleration time between Brake point OPEN and SOFTRUN OP. frequency *Only applies for OPENING direction of door travel.*	0.1 – 9.9 s	2.0 s
SLOW DO. CL.	Deceleration time between Brake point CLOSE and SOFTRUN CL. frequency *Only applies for CLOSING direction of door travel.*	0.1 – 9.9 s	2.0 s
SPD. UP MX *	Acceleration time between starting command and MX SPEED CL. frequency. *Only applies for CLOSING direction of door travel.*	0.1 – 5.0 s	2.0 s
SLO. DO. MX *	Deceleration time between Brake point CL2 and SPEED CLOSE frequency. *Only applies for CLOSING direction of door travel.* * Parameters appear only after programming Brake point CL.2.	0.1 – 5.0 s	2.0 s
SPEED UP SKS	Acceleration time after reversal of direction until SPEED OPEN/CLOSE frequency. *Applies for both directions of door/gate travel and activation of closing edge safety device.*	0.1 – 1 s	0.5 s
SLOW DO. SKS	Delay time between activating the SKS closing edge safety device and stopping the system. *Applies for both directions of door/gate travel and activation of closing edge safety device.*	0.1 – 1 s	0.1 s
SPEED UP LB	Acceleration time after reversal of direction until SPEED OPEN/CLOSE frequency. *Applies for both directions of door/gate travel and activation of photocell.*	0.1 – 5.0 s	0.5 s
SLOW DOWN LB	Delay time between activating the photocell and stopping the system. *Applies for both directions of door/gate travel and activation of photocell.*	0.1 – 5.0 s	0.5 s

Function	Description	Adjustment options	Factory setting
SLOW DO. STOP	Delay time between the stop command / reaching an end position and stopping the system. *Applies for both directions of door/gate running.*	0.0 – 5.0 s	0.5 s
RES.INVERTER	Resets all parameters of the frequency converter (factory default setting).	ON OFF	OFF
MOTOR V	Nominal motor voltage.	100 - 500 V	230 V
MOTOR I	Nominal motor current.	1 – 9.9 A	5.1 A
MOTOR P	Nominal motor current.	100 – 5000 W	550 W
MOTOR PHI	Motor power factor (cosine phi).	0 – 1	0.69
MOTOR HZ	Nominal motor frequency.	10 – 100 Hz	50 Hz
MOTOR RPM	Nominal motor rpm. **NOTICE:** The motor rating data must comply with the data on the type plate.	100 – 5000 min^{-1}	1370 min^{-1}
MOTOR HZ MIN	The minimum value to which the operating frequency of the motor can be set.	10 – 50 Hz	10 Hz
MOT.HZ MAX	The maximum value to which the operating frequency of the motor can be set.	50 – 100 Hz	87 Hz
BRAKE DELAY	Causes delayed brake release following a starting command. Prevent the door/gate from sagging when it starts from an intermediate position.	0 - 500 ms	50 ms
BOOST CONT.	Constant voltage boost relative to the output frequency. At low output frequencies, the effective resistance values of the winding can no longer be neglected in order to maintain the motor flux. To compensate voltage drops, hold the load and/or maintain the magnetisation, the inverter output voltage can therefore be boosted using this parameter.	0 – 250 V	50 V
BOOST RUN UP	Results in a voltage boost when ramping up/ramping down and generates an additional torque each time accelerating/braking occurs.	0 – 250 V	50 V
BOOST START	Voltage boost when starting. Useful for starting loads. Only active after the first acceleration process following an ON command. Setting a starting boost that is too high (BOOST START) results in the inverter limiting the current strength, which means that the output frequency is limited to a value that is lower than the nominal frequency. **NOTICE:** The voltage boosts increase the motor warming (in particular at zero speed). The boost values are combined when continuous boost (BOOST KONST. parameter) are used in conjunction with other boost parameters (BOOST BESL. acceleration boost and BOOST START starting boost). These parameters are assigned priorities, however, as follows: BOOST CONT. > BOOST RUN UP > BOOST START	0 – 250 V	0 V

Functional overviews

Function	Description	Adjustment options	Factory setting
EXPERT MENU	Activation and deactivation of expert setting. In the factory setting OFF, only a limited choice of parameters appears in INPUT mode. If this parameter is set to ON, all parameters in the input menu can be called up and set. OFF: Limited number of parameter settings: – Menu language – INC.P.OP – OPEN TIME – FOREWARNING – FAST CL. – REVERS- POINT. – INPUT 1 – SELF LOCK – BRAKE P OP – BRAKE P CL – SPEED OPEN – SPEED CLOSE – SOFTRUN OP. – SOFTRUN CL. – SPEED UP OP. – SPEED UP CL. – SLO. DO. OP. – SLO. DO. CL. – MOTOR V – MOTOR I – MOTOR P – MOTOR PHI – MOTOR HZ – MOTOR RPM – EXPERT MENU ON: Access to all parameters as listed in Chapter 11.2.	ON – OFF	OFF

11.3 Explanations of the relay modes:

A. Traffic light functions

MOD	Description	CLOSED limit position	OPEN limit position	Forewarning	Door movement
MOD1	Red traffic light inside 1	ON / OFF [1]	OFF [2]	Flashing	Illuminated
MOD2	Red traffic light inside 2	ON / OFF [1]	OFF [2]	Flashing	Flashing
MOD3	Red traffic light inside 3	ON / OFF [1]	OFF [2]	Illuminated	Illuminated
MOD18	Red traffic light inside 4	OFF	OFF	Flashing	OFF
MOD23	Green traffic light inside	OFF	Illuminated [2]	OFF	OFF
MOD44	Red traffic light inside + outside	OFF	OFF	OFF	Flashing [3]
MOD60	Red traffic light outside 1	ON / OFF [1]	OFF [2]	Flashing	Illuminated
MOD61	Red traffic light outside 2	ON / OFF [1]	OFF [2]	Flashing	Flashing
MOD62	Green traffic light [4]	OFF	Illuminated [2]	OFF	OFF

[1] depending on the parameter TL REST
[2] With active two-way control: Depending on the UP command inside or outside
[3] from intermediate position DOWN to DOWN, also after stop command. Only in CLOSE direction.

B. Position messages

MOD	Description	Remarks
MOD6	UP limit position	The relay closes the contact when the door is in the OPEN limit position.
MOD7	DOWN limit position	The relay closes the contact when the door is in the CLOSED limit position.
MOD8	Not OPEN limit position	The relay closes the contact when the door is not in the OPEN limit position.
MOD9	Not CLOSED limit position	The relay closes the contact when the door is not in the CLOSED limit position.
MOD10	Intermediate OPEN position (Sect. OPEN)	The relay closes the contact when the door is in the intermediate OPEN position (Sect. OPEN).
MOD11	Intermediate CLOSED position (Sect. CLOSED)	The relay closes the contact when the door is in the intermediate CLOSED position (Sect. CLOSED).
MOD12	Intermediate CLOSED position to CLOSED limit position	The relay closes the contact when the door is in the range between the CLOSED limit position and the intermediate CLOSED position (Sect. CLOSED).
MOD19	Intermediate OPEN position to OPEN limit position	The relay closes the contact when the door is in the range between the OPEN limit position and the intermediate OPEN position (Sect. OPEN).

Functional overviews

C. Pulse signals

MOD	Description	Remarks
MOD4	Pulse with OPEN command from inside	The relay closes the contact for 1 second if the door receives an OPEN command from inside. It is possible to realise light actuation with this pulse for example.
MOD27	Pulse after reaching the OPEN limit position	The relay closes the contact for 2 seconds if the door reaches the OPEN limit position. It is possible to open a downstream cabinet with this pulse for example.
MOD 40	Pulse with OPEN command from outside	The relay closes the contact for 1 second if the door receives an OPEN command from outside. It is possible to realise light actuation with this pulse for example.

D. Brake functions (can only be set at relay 4)

MOD	Description	Remarks
MOD14	Brake (closed-circuit current principle)	The switching contact of the brake rectifier is controlled via the relay in order to implement a faster braking function. As soon as the door moves, the contact is closed and the brake is vented (closed-circuit current principle).
MOD15	Brake (open-circuit current principle)	The switching contact of the brake rectifier is controlled via the relay in order to implement a faster braking function. As soon as the door moves, the contact is opened and the brake is vented (open-circuit current principle).
MOD16	Brake (closed-circuit current principle) applied in OPEN limit position	The switching contact of the brake rectifier is controlled via the relay in order to implement a faster braking function. As soon as the door moves, the contact is closed and the brake is vented (closed-circuit current principle). To achieve a smoother stopping behaviour of the door in the top limit position, the switching contact is not switched in the OPEN LIMIT POSITION.

E. Error messages

MOD	Description	Remarks
MOD5	Fault message	The relay opens the contact if a STOP command or an error is present. All errors of chapter 12 lead to relay actuation.
MOD17	Closing edge protective device SKS 1-4 actuated	Monitoring SKS1 (X4/5-8) , SKS2 (X4/11-12) and SKS3/SKS4 (transmission system). The relay opens the contact if one of the closing edge protective devices SKS 1-4 is actuated. An error with one of the closing edge protective devices or a faulty test is displayed via MOD5.
MOD35	Light barrier	Analogous to the light barrier input X4 (3/4), switches the applied signal on as a message. Relay ON: Light barrier signal is OK Relay OFF: Light beam interrupted or light barrier defective
MOD39	Error LED	The relay always closes the contact if the internal error LED 2 (red) lights up.
MOD45	Closing edge protective devices SKS 1-4 OK	Monitoring SKS1 (X4/5-8) , SKS2 (X4/11-12) and SKS3/SKS4 (transmission system) Relay ON: All closing edge protective devices are OK Relay OFF: At least one closing edge protective device is actuated or defective

F. Movement signal

MOD	Description	Remarks
MOD29	Door drives open.	Active with movement in the OPEN direction.
MOD30	Door drives closed.	Active with movement in the CLOSE direction.
MOD43	Door drives open or closed.	Active with all movement. The brake monitoring module BWM 1 is not active with this setting!

G. Functions for external accessories

MOD	Description	Remarks
MOD13	Magnetic lock function	The relay closes before every door movement. The relay is opened in the standby position. A delay time of 0.5 seconds is set before every door movement.
MOD21	Test of the trap-in protection	The relay generates a test signal upon reaching the CLOSED limit position and awaits actuation of the STOP circuit as a response to the test signal.
MOD22	Activation of transmission system radio 1 and radio 4, test of light grid 1	The relay generates a test signal upon reaching the OPEN limit position and awaits actuation of the switching strip input as a response to the test signal.
MOD24	Capacitor switching	With every operation command, the relay is closed for approx. 1 second. This relay is used to add an additional start capacitor required for alternating current applications to ensure safe starting of the motor. For series STAW with increased switch-on duration.
MOD25	Courtyard light function	With each OPEN command, the relay is closed for 2 minutes and can therefore be used to control a lighting system.
MOD26	Activation of transmission system radio 2 and radio 4	Before every DOWN command, the transmission system radio is activated with a pulse. The duration of activation must be set on the transmission system. As a result of this activation, travel is delayed by approx. 0.5 seconds.
MOD28	Relay OFF	The relay is switched off as a general rule, the contact is always open.
MOD36	Pneumatic cylinder for locking the slip door (threshold-free door system)	With every OPEN command the relay is activated and controls a pneumatic cylinder that mechanically locks the slip door of the door. The locking position of the cylinder is queried via a limit switch. Only after this limit switch is released does the door start to move. The relay remains active until the lower end point is reached again.
MOD37	Testing the stop signal via transmission system radio 1 and radio 3	The relay generates a test signal upon reaching the OPEN limit position and awaits an interruption of the stop circuit as a response to the test signal.
MOD38	Test of light grid 2 (8.2 kΩ), connection via input 2 (X4 / 11+12)	The relay generates a test signal upon reaching the OPEN limit position and awaits an interruption at input 2 as a response to the test signal.
MOD 41	Activation transmission system radio 4 in OPEN direction	The relay generates a test signal upon reaching the CLOSED limit position and awaits an interruption at input 2 as a response to the test signal.
MOD49	Testing presence and movement sensors (NC)	The relay generates a test signal each time before closing travel and awaits an interruption of the closing edge input as a response to the test signal.

H. Input-dependent messages

MOD	Description	Remarks
MOD32	Battery operation	Active with battery operation. Input 2 is bridged (setting MOD5).
MOD33	no battery operation	Active with mains operation. Input 2 is open (setting MOD5). When programmed with MOD32/33, the relays operate as delayed changeover contacts and follow the signal at input 2 when MOD5 is set. In this case, input 2 is fed with a control signal from the UPS system, which ensures the changeover between mains supply and UPS supply.
MOD34	BMA signal	Switches with an active fire alarm system. Follows the signal at input 1 with setting MOD5-9 / 13. In this case, input 1 is fed with a control signal from the fire alarm system and, depending on the setting, the door opens or closes to an end or intermediate position.

I. System messages

MOD	Description	Remarks
MOD31	Service	The relay is active after reaching the programmed service interval. Only after the service interval is reset or redefined does the relay drop out again. ➔ „11.2 Input operating mode" on page 41
MOD46	ADJUSTMENT operating mode	The relay is active if the control is in the ADJUSTMENT operating mode.

11.4 Explanations of the inputs:

A. Functions input 1

MOD	Description	Remarks
MOD1	SECT. OPEN button	By pressing the button (input 1), the door opens to the intermediate OPEN position (SECT. OPEN).
MOD2	SECT. OPEN switch	Closed: All OPEN commands lead to intermediate OPEN position (SECT. OPEN). Open: All OPEN commands lead to the OPEN limit position.
MOD3	AUT.CLOSE switch	Closed: No automatic closing. (Open time stops, if open time > 0). Open: Automatic closing is active (if open time > 0).
MOD4	External CLOCK (permanent OPEN)	The door opens as soon as the contact closes and remains in the OPEN position (maintain open time) until the contact opens. Then the door drives closed automatically (only with open time > 0). This function can be cancelled by actuating the CLOSE button. The door drives CLOSED.

MOD	Description	Remarks
MOD5	Switch BMA 3 (Sect. opening) NO	Control function with an active fire alarm system. Open: Normal function. Closed: Sect. opening of the door. The intermediate OPEN position (Sect. OPEN) is approached from both directions, irrespective of the current door position. BUTTON: No function. LB / SKS: Door stops and moves clear (only in CLOSE direction), after 5 seconds renewed closing. STOP: Interruption of the emergency closing for the duration of activation.
MOD6	Switch BMA 1 (emergency closing) NO	Control function with an active fire alarm system. Open: Normal function. Closed: Emergency closing of the door. BUTTON: No function. LB / SKS: Door stops and moves clear, after 5 seconds renewed emergency closing. STOP: Interruption of the emergency closing for the duration of activation.
MOD7	Switch BMA 1 (emergency closing) NC	Control function with an active fire alarm system. Closed: Normal function. Open: Emergency closing of the door. BUTTON: No function. LB / SKS: Door stops and moves clear, after 5 seconds renewed emergency closing. STOP: Interruption of the emergency closing for the duration of activation.
MOD8	Switch BMA 2 (emergency opening) NO	Control function with an active fire alarm system. Open: Normal function. Closed: Emergency opening of the door. BUTTON: No function. LB / SKS: No function. STOP: Interruption of the emergency opening for the duration of activation. No automatic closing after deactivation of the BMA signal.
MOD9	Switch BMA 2 (emergency opening) NC	Control function with an active fire alarm system. Closed: Normal function. Open: Emergency opening of the door. BUTTON: No function. LB / SKS: No function. STOP: Interruption of the emergency opening for the duration of activation. No automatic closing after deactivation of the BMA signal.
MOD10	Button ventilation function NO	Sect. opening of the door. By pressing an additional button at input 1, the intermediate CLOSED position (Sect. CLOSED) is approached from both directions, independent of the current door position.
MOD11	"Automatic closing" button	1. Actuation: No automatic closing, open time is stopped. 2. Actuation: Automatic closing is active again if open time > 0. 3. Actuation: No automatic closing, open time is stopped. …
MOD12	Laser scanner (height detection)	Only in conjunction with input 2 (MOD6). ➔ See explanations for input 2

Functional overviews

MOD	Description	Remarks
MOD13	Switch BMA 3 (Sect. opening) NC	Control function with an active fire alarm system. Closed: Normal function. Open: Sect. opening of the door. The intermediate OPEN position (SECT. OPEN) is approached from both directions, irrespective of the current door position. BUTTON: no function. LB / SKS: Door stops and moves clear (only in CLOSE direction), after 5 seconds renewed closing. STOP: Interruption of the emergency closing for the duration of activation.
MOD14	Slip door locking	Monitoring limit switch for the pneumatic locking system of slip doors. The limit switch must have confirmed the correct locking within 10 seconds after an OPEN command, otherwise an error message is issued and the door stops. This function acts on relay mode 36.
MOD15	Light barrier 2 NC	If a second light barrier is connected in the passage area of the door, this system can be programmed via the parameter LB FUNC 2 in the INPUT. Only connection of light barriers with potential-free NC contact.
MOD16	Forewarning switch	Closed: Start-up warning and forewarning are inactive (even if both times > 0). Open: Start-up warning and forewarning are active (only if both times > 0). ➔ „11.2 Input operating mode" on page 41
MOD17	Impuls button outside	Pressing the button moves or stops the door. – Function and direction of the movement depend on the IMPULS parameter setting in the input menu. ➔ „11.2 Input operating mode" on page 41 / IMPULS parameter – With active two-way control, this pulse command is treated as an external signal.
MOD18	Crash sensor NC	Query of a crash sensor as NC contact. If the crash sensor was actuated once, only renewed door travel is possible. – after pressing and holding the STOP button for more than 5 seconds, or – switching the supply voltage off and back on.
MOD19	Switch block operation commands NC	Closed: no restrictions. Open: It is no longer possible to use the (+) and (-) buttons on the LCD monitor and the motherboard to issue operation commands in AUTOMATIC mode.
MOD22	Monitoring an external load contactor	In a control version with external load contactor (motor power > 2.2kW / 8A) the auxiliary contacts of the load contactor (NO) are connected and monitored here.
MOD30	UP switch inside	Pressing the button opens the door to the UP limit position. The internal traffic light switches to green.
MOD31	UP switch outside	Pressing the button opens the door to the UP limit position. The external traffic light switches to green.
MOD32	DOWN switch	Pressing the button closes the door to the DOWN limit position. Only active with functioning closing edge protective device and functioning light barrier 1. No function in dead-man's operation.

B. Functions input 2

MOD	Description	Remarks
OFF		Not active.
MOD2	Safety switching with resistance evaluation	With first commissioning and after a reset, input 2 is set to A (self-teaching) once. If a resistance value is detected, MOD2 is automatically set and the measured value is stored and monitored as a reference for the connected safety-related components. ➔ „5.14 Safety input per EN 12453" on page 23 Deviation of the measured value leads to an error message. If a safety element is subsequently added or removed, the resistance measurement must be performed again. For this purpose the parameter INPUT 2 must be manually reset to A (self-teaching) and the supply voltage must be switched off and on again. Renewed measurement then takes place. If no connected component is detected during initial commissioning or after a reset, the input is automatically deactivated. OFF appears in the display and the input must be manually activated.
MOD3	Switching strip OPEN (8.2 kΩ)	Switching strip active in OPEN direction. Stop and reversing to the CLOSED limit position upon actuation of the switching strip.
MOD4	Switching strip OPEN (8.2 kΩ)	Switching strip active in OPEN direction. Stop and close for 2 seconds (rev) with actuation of the switching strip.
MOD5	Battery operation (MDFU-special) NO	Active with supply via battery. Relay switching MOD32 / MOD33.
MOD6	Radar movement detector (Height detection) NO	The function is coupled with input 1 (MOD12 – laser scanner). The upstream laser scanner detects the height of the vehicle. The connected radar motion detector generates an OPEN command when activated. – A tall vehicle (HGV) is detected by the laser scanner. The laser scanner switches input 1 (MOD12) to ON. The radar motion detector detects the vehicle and triggers the door movement. The door is moved to the OPEN limit position. – A low vehicle (car) is detected by the laser scanner. The laser scanner switches input 1 (MOD12) to OFF. The radar motion detector detects the vehicle and triggers the door movement. The door is moved to the intermediate OPEN position (SECT. OPEN). All other OPEN commands (via X3, X7, X9, X13) always move the door to the OPEN limit position. The function of input 1 (MOD12) is then irrelevant.
MOD7	Light grid 2 (SSR / PNP) with testing	Behaves like light grid 1 (SKS MOD 4 – 6). – Light grid active in CLOSE direction. – Stops and reverses with actuation of the light grid. Form of reversing (reverse / rev) is accepted.
MOD8	Safety switching with resistance evaluation	With first commissioning and after a reset, input 2 is set to A (self-teaching) once. If a resistance value is detected, MOD8 is automatically set and the measured value is stored and monitored as a reference for the connected safety-related components. ➔ „5.14 Safety input per EN 12453" on page 23 Deviation of the measured value leads to an error message. If a safety element is subsequently added or removed, the resistance measurement must be performed again. For this purpose the parameter INPUT 2 must be manually reset to A (self-teaching) and the supply voltage must be switched off and on again. Renewed measurement then takes place. If no connected component is detected during initial commissioning or after a reset, the input is automatically deactivated. OFF appears in the display and the input must be manually activated.
MOD9	Safety element (OSE)	STOP the system with actuation.

Functional overviews

MOD	Description	Remarks
MOD10	Switching strip OPEN (OSE)	Switching strip active in OPEN direction. Stop and reversing to the CLOSED limit position upon actuation of the switching strip.
MOD11	Switching strip OPEN (OSE)	Switching strip active in OPEN direction. Stop and close for 2 seconds (rev) with actuation of the switching strip.
MOD12	Light grid 2 (OSE) without testing	Behaves like light grid 1 (SKS MOD 4 – 6). – Light grid active in CLOSE direction. – Stops and reverses with actuation of the light grid. Form of reversing (reverse / rev) is accepted.

11.5 Diagnosis operating mode / error memory

Display	Meaning	Condition	
UPPER SWITCH	UP limit position	OFF: ON:	Limit position reached. Limit position not reached.
LOWER SWITCH	DOWN limit position	OFF: ON:	Limit position reached. Limit position not reached.
UP-SWITCH	Command button / input OPEN	ON: OFF:	Button is actuated / input is active. Button not actuated / input not active.
DOWN-SWITCH	Command button / input CLOSE	ON: OFF:	Button is actuated / input is active. Button not actuated / input not active.
INPUT 1	Programmable INPUT 1 (X4 / 9 + 10)	ON: OFF:	Input 1 is active. Input 1 is not active.
INPUT 2 / SKS OPEN 2 / SAFE. 2 (optionally)	Programmable INPUT 2 (X4 / 11 + 12) Input dependent on MOD selected at the programmable input. INPUT 2 with MOD 5-7 SKS OPEN 2 with MOD 3-4 SAFE. 2 with MOD 2	ON: OFF: —:	Input 2 is active. Input 2 is not active. Not activated.
INPUT 3	Programmable INPUT 3 (X10 / 1 – 3)	ON: OFF: —:	Input 3 is active. Input 3 is not active. Not activated.
SKS	Closing edge protective device 1 (DW, 8.2kΩ or photo-sensor) or light grid 1 (PNP or photo-sensor) (X4 / 5-8) CLOSE direction	ON: OFF:	System is closed. System is interrupted (fault).

Display	Meaning	Condition
SKS 3 / SAFE. 3 (optionally)	Closing edge protective device 3 (8.2kΩ or photo-sensor) Radio transmission system channel 1 OPEN or CLOSE direction Display dependent on MOD selected at parameter SKS 3. SKS 3 with MOD 2-3 SAFE. 3 with MOD 4	ON: System is closed. OFF: System is interrupted (fault). —: Not activated.
SKS 4 / SAFE. 4 (optionally)	Closing edge protective device 4 (8.2kΩ or photo-sensor) Radio transmission system channel 2 OPEN or CLOSE direction Display dependent on MOD selected at parameter SKS 4. SKS 4 with MOD 2-3 SAFE. 4 with MOD 4	ON: System is closed. OFF: System is interrupted (fault). —: Not activated.
IMPULS	Command button / input IMPULS (X3 / 7+8)	ON: Button is actuated / input is active. OFF: Button is not actuated / input is not active.
TIMER	Week timer (pluggable)	ON: Timer is active. OFF: Timer is not active.
LIGHT BARR.	Light barrier 1 (X4 / 1-4)	ON: Light barrier signal is OK. OFF: Light beam interrupted or light barrier defective.
LIGHT BARR. 2	Light barrier 2 Connection at input 1 (X4 / 9+10)	ON: Light barrier signal is OK. OFF: Light beam interrupted or light barrier defective.
SAFETY CIRC.	Safety circuit 1 Emergency stop systems of door system	ON: Safety circuit is closed. OFF: Safety circuit is interrupted.
STOP	Command button STOP (cover keypad)	ON: Button is not actuated. OFF: Button is actuated.
ROT FIELD	Shows the currently set rolling direction of the drive	RIGHT: Setting for a right rotating field. LEFT: Setting for a left rotating field.
CYCLE	Door cycle counter	Display of the door cycles that have run through: 1 x open + 1 x CLOSE = 1 cycle Counting only takes place when the end switch-off points have each been reached.
SERVICE	Service alarm function Setting via parameter SERVICE and PIN no. 2	OFF: Service display not active. 0 – 99999: Service display is active. Display of the remaining door cycles up to the service message.
AWG	Position information of the absolute value encoder	Display of the currently transferred value.
C.STOP	HALT/STOP counter	Shows how often the door was stopped. Either through activation of a safety device, in case of direct direction reversal by a run command or by a direct STOP/HALT command.
C.OPENED	Counter for top limit position	Shows how often the top limit position was approached.

Functional overviews

Display	Meaning	Condition
C.O.BTN	Counter for OPEN commands	Number of all incoming OPEN commands through command devices, sensors and safety devices (e. g. light barrier).
ERROR … COUNT CYCLE	Controller error memory. The error messages of the controller can be read out here with information about frequency and cycle. Use the [+] and [-] keys on the LCD monitor to scroll through the list of various error messages. ➔ „12.1 Fault display on the LCD monitor" Deletion of the error memory: Press the buttons [+] and [–] simultaneously for approx. 2 seconds. Each error message must be individually deleted.	The display changes in 2-second intervals between – the fault description, – the frequency of occurrence, and – the information on which cycle the fault arose most recently. Only errors that have already occurred appear in the list.

The following messages can be read from the error memory, but are not displayed in the AUTOMATIC operating mode:

Display	Meaning	Condition
POWER ON	Counter for switching the supply voltage off and back on again.	Counts up by actively switching the supply on and off, or with power failures.
ERROR SUPP.VOLT.	Counter for the occurrence of deviations in the supply voltage.	Overvoltage and undervoltage are detected and counted.
RESTART	Restart counter	Display of the restarts executed. Caused by detection of undervoltage, change of the limit position system, change to the motor parameters, or after a RESET of the controller.

12. Fault display and remedial measures

12.1 Fault display on the LCD monitor

Fault / message	Cause	Rectification
System does not react.	– No voltage present.	– Check power supply for the drive and controller.
Door drives to the CLOSED limit position upon actuation of the OPEN button. Door drives to the OPEN limit position upon actuation of the CLOSE button.	– Rotating field has been incorrectly connected.	– Check rotating field and establish right rotating field if necessary.
FAULT – X	– internal software or hardware error.	– RESET via circuit board button: ➔ „8.6 RESETTING the controller without LCD monitor"
SAFETY CIRC.	– The safety circuit is interrupted. X3 / 1+2 Safety circuit controller EMERGENCY STOP, slack rope switch X6 / 1+2 ON / OFF internal X11 / 4+8 Safety circuit drive AWG X2 / B1+B2 Safety circuit drive MEC X3 / 3+4 Stop button external X7 / 1+2 Stop button internal	– Check safety circuit, locate interruption and eliminate problem.
ERROR STOP	– An error has occurred at the safety input (X4/11-12 - MOD2).	– Check all components at the safety input and replace if necessary.
ERROR RUNTIME	– The programed running time has been exceeded.	– Check the path of the door and running time. – Re-programme the running time if necessary.
ERROR AWG	– Signal transmission between absolute value encoder and controller is interrupted or faulty.	– Check cable and connector and replace if necessary.
TERM SWITCH FAIL	– The door is located outside the programmed limit position range. – The limit positions are not yet programmed.	– Reset the door in the programmed range via the emergency operation. – First program the limit positions.
ERROR REVOLUTION	– The power monitoring has triggered.	– Check door for mechanical impairments.
ERROR DIRECTION	– The present rotating field is not clockwise rotating.	– Check rotating field and change if necessary. ➔ „7.1 Checking the drive / travel direction"
ERROR SKS CLOSE	– Closing edge protective device 1 defective in CLOSE direction –> (X4 / 5-8).	– Check closing edge protective devices and spiral cable.
ERROR SKS OPEN 2	– Closing edge protective device 2 defective in OPEN direction –> (X4 / 11+12) input 2.	– Check closing edge protective devices and spiral cable.
ERROR STOP. 2	– Safety circuit 2 is interrupted. Slip door switch 8.2 kΩ –> (X4 / 11+12) input 2.	– Check slip door switch.
ERROR SKS CLOSE 3	– Closing edge protective device 3 defective in CLOSE direction –> (X20) Pluggable transmission system RADIO channel 1.	– Check closing edge protective device. – Check transmission system RADIO. – Check setting of parameter SKS 3.

Fault display and remedial measures

Fault / message	Cause	Rectification
ERROR SKS OPEN 3	– Closing edge protective device 3 defective in OPEN direction –> (X20) Pluggable transmission system RADIO channel 1.	– Check closing edge protective device. – Check transmission system RADIO. – Check setting of parameter SKS 3.
ERROR STOP. 3	– Safety circuit 3 is interrupted. –> (X20) Pluggable transmission system RADIO channel 1.	– Check safety circuit. – Check transmission system RADIO.
ERROR SKS CLOSE 4	– Closing edge protective device 4 defective in CLOSE direction –> (X20) Pluggable transmission system RADIO channel 2.	– Check closing edge protective device. – Check transmission system RADIO. – Check setting of parameter SKS 4.
ERROR SKS OPEN 4	– Closing edge protective device 4 defective in OPEN direction –> (X20) Pluggable transmission system RADIO channel 2.	– Check closing edge protective device. – Check transmission system RADIO. – Check setting of parameter SKS 4.
ERROR STOP. 4	– Safety circuit 4 is interrupted. –> (X20) Pluggable transmission system RADIO channel 2.	– Check safety circuit. – Check transmission system RADIO.
ERROR SKS-TEST	– The test of the connected pressure wave strip was unsuccessful.	– Check DW switch, spiral cable and rubber profile. – Check DW-POINT setting.
	– The test of the transmission systems RADIO 1 – 4 failed.	– Check transmission system RADIO. – Check relay MOD setting for transmission system. ➔ „G. Functions for external accessories“ on page 53
ERROR LIGHT BAR.	– The connected light barrier exhibits a permanent fault. –> (X4 / 1-4)	– Check light barrier (function and alignment). – Check cabling.
ERROR LIGHT BAR. 2	– The connected light barrier exhibits a permanent fault. –> (X4 / 9+10) input 1	– Check light barrier (function and alignment). – Check cabling.
ERROR LB TEST	– The test of the 2-wire light barrier failed.	– Check light barrier (function and alignment). – Check cabling.
ERROR STOP-TEST	– The test of the slip door switch (8.2 kΩ) failed. –> input 2	– Check slip door switch.
ERROR TRAPIN	– The test of the trap-in protection (auxiliary module) failed. –> Relay MOD21	– Check light barrier (function and alignment). – Check cabling.
ERROR CYLINDER	– The monitoring limit switch of the locking system for threshold-free slip doors has not switched within 10 seconds of the input of an OPEN command.	– Check limit switch of the cylinder.
ERROR MSBUS	– The communication between the controller and connected MS-BUS module is interrupted.	– Check cable and connectors and replace if necessary.
ERROR 24 V	– The voltage supply 24V DC (X4/1-2) was switched off due to excessive load from external consumers.	– Reduce the number of connected consumers. – Limit current draw to max. 500 mA through the selection of other components.
ERROR POWERSEGM.	– The load contactor or a relay is defective.	– The circuit board must be replaced.

Fault / message	Cause	Rectification
ERROR BRAKE	– Monitoring module BWM1 has identified a defect at relay 4.	– The circuit board must be replaced.
ERROR INVERTER	Communication fault. – Communication between frequency converter and control CS 320 interrupted and/or broken down. – Bridge (F) missing between DIC and 0V.	– Check communication cable (C) and plug-in connections to control and frequency converter. – Use bridge (F) between DIC and 0V (only with frequency converter type V20). – Confirm with the STOP button.
ERROR INVERTER 1	Overcurrent. – Motor rating does not correspond to converter rating. – Short-circuit in the motor cable. – Earth leakage.	– Check motor rating / inverter rating. – Check motor / motor cable for short-circuit and earth leakage. – Adjust the motor parameter settings to the information on the type plate. – Check that the the door/gate system runs smoothly. – Check the spring balance in sectional doors. – Confirm with the STOP button.
ERROR INVERTER 2	Overvoltage. – Mains voltage too high. – Motor is working generator-based due to ramping down too fast or due to an active load which is driving the motor.	– Check the voltage supply to the door operator and the control. – Confirm with the STOP button.
ERROR INVERTER 3	Undervoltage. – Mains voltage too low. – Mains voltage supply failed.	– Check the voltage supply to the door operator and the control. – Check that all connections are firmly attached. – Confirm with the STOP button.
ERROR INVERTER 4	Inverter overtemperature. – Inverter overloaded. – Ambient temperature too high.	– Check motor rating / inverter rating. – Adjust the motor parameter settings to the information on the type plate. – Check duty cycle. – Check that the the door/gate system runs smoothly. – Check the spring balance in sectional doors. – Confirm with the STOP button.
ERROR INVERTER 5	Inverter I2T – Inverter overloaded. – Motor rating does not correspond to converter rating. – Load cycle too high.	– Check motor rating / inverter rating. – Adjust the motor parameter settings to the information on the type plate. – Check load cycle.
ERROR INVERTER 11	Motor overtemperature 12.T – Motor overloaded.	– Check that the the door/gate system runs smoothly. – Check the spring balance in sectional doors. – Confirm with the STOP button.
ERROR INVERTER 51	Internal fault.	– Get in touch with our customer service.
ERROR INVERTER 52	Internal fault.	– Get in touch with our customer service.
ERROR INVERTER 60	Internal fault.	– Get in touch with our customer service.
ERROR INVERTER 72	Internal fault.	– Get in touch with our customer service.
ERROR INVERTER 85	External fault. – External fault through command input using terminals.	– Check connection terminals of communication cable (D) on inverter. – Confirm with the STOP button.

Fault display and remedial measures

Fault / message	Cause	Rectification
ERROR INVERTER -1	24V voltage from the frequency inverter missing. – Frequency inverter is not switched on or is defective. – Communication cable (C) defective.	– Check frequency inverter. – Check communication cable (C) and plug connections on the controller and frequency inverter. – Acknowledge with STOP.
ERROR INVERTER -2	Initialisation – Frequency inverter initialisation defective. – A value that does not match with the frequency inverter was set in the settings, e.g. 400V with a 230V frequency inverter. Under-voltage – Mains voltage too low. – Mains voltage dropped out.	– Check the frequency inverter settings or get in touch with customer services. – Check power supply for the drive and controller. – Check all connections are secure. – Acknowledge with STOP.
ERROR INVERTER -3	Frequency inverter fault – Frequency inverter reports a fault without error number.	– Get in touch with customer services.
ERROR INVERTER -4	Communication error with frequency inverter. – EMC radiation too high.	– Check environment and screen or switch off external devices. – Get in touch with customer services.
ERROR INVERTER -5	Frequency inverter does not issue frequency. – Internal fault.	– Get in touch with customer services.
ERROR INVERTER -6	Internal communication defective. – Internal fault.	– Get in touch with customer services.
ERROR INVERTER -7	Frequency inverter has not responded to a signal.	– Acknowledge with STOP, – otherwise get in touch with customer services

After rectifying the cause of the error, the power supply to the control must be turned off once and/or the control must be restarted (> INPUT menu > parameter RESTART > ON) in the event of the following errors:

– ERROR DIRECTION
– ERROR REVOLUTION
– ERROR RUNTIME
– TERM SWITCH FAIL

12.2 Error message via LED indicator

LED H1 (green, main circuit board)

Fault / error message	LED indicator	Remarks
No operating voltage	Off	No power supply present.

LED H2 (red, main circuit board)

Fault / error message	LED indicator	Remarks
SAFETY CIRC.	Flashes 1 x	Safety circuit is interrupted. – Check safety circuit, localise interruption and rectify problem.
ERROR AWG	Flashes 2 x	Signal transmission between absolute value encoder and control interrupted and/or broken down. – Check the cable and socket connections and replace, if necessary.
TERM SWITCH FAIL	Flashes 3 x	The door has travelled beyond the programmed end position area or the end positions have not yet been programmed. – First, programme the end positions. – Move the door/gate back into the programmed area using the emergency operation facility.
ERROR DIRECTION	Flashes 4 x	The rotating field present is not a clockwise rotating field. – Check the rotating field and change the direction, if necessary. ➔ „7.1 Checking the drive / travel direction“
ERROR REVOLUTION	Flashes 5 x	The power monitoring has been triggered. – Check the door for any mechanical impairment or damage.
ERROR RUNTIME	Flashes 6 x	The programmed running time has been exceeded. – Check the path of the door and the running time. – Re-programme the running time, if necessary.
ERROR MSBUS	Flashes 9 x	Communication error between the control and the installed MS BUS end device. – Check the cable and socket connections and replace, if necessary.
SERVICE	Flashes 10x	The programmed service interval has been reached. – Reset or redefine service interval. ➔ „11.2 Input operating mode“ / SERVICE parameter
ERROR POWERSEGM.	Flashes 11x	The load contactor or a relay is defective. – The circuit board must be replaced.
ERROR STOP	Continuous illumination, travel no longer possible.	– An error has occurred at the safety input (X4/11-12 - MOD2). – Check all components at the safety input and replace if necessary.

Fault display and remedial measures

Fault / error message	LED indicator	Remarks
ERROR SKS	Continuous light Travel only possible in deadman mode	Closing edge safety device faulty in OPENING or CLOSING direction. – Check the closing edge safety device and the spiral cable and, if necessary, check the RADIO transmission system.
ERROR LIGHT BAR	Continuous light Travel in CLOSING direction only possible in deadman mode	The installed photocell indicates a permanent fault. – Check photocell (function and alignment). – Check cabling.

13. Technical data

13.1 Mechanical and electrical data

Housing dimensions (W x H x D):	215 x 275 x 190 mm (FU-I 0.75 kW) 245 x 455 x 190 mm (FU-E 0.75 kW, FU-E 1.5 kW / 400V / 3~ FU-E 2.2 kW / 400V / 3~) 260 x 550 x 245 mm (FU-E 1.5 kW / 230V / 1~ FU-E 3.0 kW / 400V / 3~ FU-E 4.0 kW / 400V / 3~)
Installation:	Fix vertically to the wall at a minimum height of 1,100 mm
Power supply via	
L1, N, PE:	230V/1~ , 50/60Hz (0.75 kW / 1.5 kW)
L1, L2, L3, N, PE:	400V/3~ , 50/60Hz (0.75 kW / 1.5 kW / 2.2 kW / 3.0 kW / 4.0 kW)
Maximum rated motor current:	230V/1~ / 0.75 kW –> 4.1 A 230V/1~ / 1.5 kW –> 6.7 A 400V/3~ / 0.75 kW –> 2,2 A 400V/3~ / 1.5 kW –> 4.1 A 400V/3~ / 2.2 kW –> 5.6 A 400V/3~ / 3.0 kW –> 7.3 A 400V/3~ / 4.0 kW –> 8.8 A
Fuse protection:	230V/1~ / 0.75 kW –> 10 A 230V/1~ / 1.5 kW –> 16 A 400V/3~ / 0.75 kW –> 10 A 400V/3~ / 1.5 kW –> 10 A 400V/3~ / 2.2 kW –> 10 A 400V/3~ / 3.0 kW –> 10 A 400V/3~ / 4.0 kW –> 16 A Fuse elements with K-type characteristic. If supplied with three-phase current, only blocks of three automatic circuit-breakers must be used.
Controller internal consumption:	max. 750 mA
Control voltage:	24 V DC, max. 500 mA; protected by automatically resetting fuse for external sensors
Controller inputs:	24 V DC, all inputs are to be connected potential-free. Minimum signal duration for input controller command >100 ms.
Controller outputs:	24 V DC, max. 500 mA.
Safety circuit / emergency stop:	All inputs must be connected potential-free; with an interruption of the safety chain, no further electrical movement of the drive is possible, even with dead man's switching.
Light barrier (Protection level D):	If the light barrier is used as a protection system according to level D, its function must be checked regularly and within 6 months as a minimum. If this is a self-testing system, this requirement does not apply.
Safety input with resistance evaluation	Performance Level C, cat.2 for safety-related components with 8.2 kΩ terminal resistance
Display (LCD):	Only an original LCD monitor from Marantec Legden may be used.
Relay outputs:	If inductive loads are to be switched (e.g. Additional relays or brakes), these must be equipped with corresponding interference suppression measures (e.g. Free-wheeling diodes, varistors, RC elements). Work contact potential-free; min. 10 mA; max. 230 V AC / 4A. *Contacts that have been used for power switching can no longer be used for switching low currents.*
Temperature range:	Operation: -10°C to +45°C Storage: -25°C to +70°C
Humidity:	Up to 80% non-condensing.
Vibrations:	Low-vibration mounting, e. g. on a masonry wall.
Protection grade	IP 65
Weight	approx. 1.8 kg

13.2 Category and performance level of the safety function per EN ISO 13849-1

Function	Realisation	$MTTF_D$ Electronics	$MTTF_D$ Total with output contactor	DC_{avg}	Category	Performance Level
Emergency stop	Input terminal X3, X6, X7, X11 Interrupts the power supply to the output relay and main contactor, independent of the CPU. Feedback to the CPU available.	1175 years	191 years	84.7%	3	d
Stop circuit	Input terminal X3, X7 Interrupts the supply to the main contactor. Message to CPU.	1175 years	191 years	-	B	b
End position detection through absolute value encoder	Input terminal X11 For position determination and end position detection. Testing through plausibility check of expected position values to received position values.	1062 years	188 years	83.7%	2	c
End position detection through end position switch	Input terminal X15 Protection through runtime limiting. Inputs are evaluated by the CPU.	1248 years	193 years	63.1%	2	c
Light barrier evaluation	Input terminal X4 Pulse evaluation through CPU. Faults are identified through plausibility evaluation in the CPU. The frequency must lie between 130 Hz and 190 Hz. The function is monitored by switching the supply voltage (T117, IC111) of the light barrier each time before travel and every two minutes when idle. With activation in the CLOSE direction, a stop or reversing of the door takes place.	1000 years	186 years	81.9%	2	c
Evaluation of a pneumatic switching strip	Input terminal X4 Evaluation through CPU. Testing through plausibility evaluation. Switching signal must come shortly before reaching the lower end positions.	1123 years	190 years	85.6%	2	c
Evaluation of single or double 8k2 / single OSE SKS	Input terminal X4 Evaluation through CPU. The function is monitored by switching the supply voltage (IC110, T138) each time before travel.	1123 years	190 years	85.6%	2	c

DC_{AVG} Average diagnostic coverage
$MTTF_D$ Mean time to dangerous failure

14. Service

⚠ WARNING!

Life-threatening danger due to electric shock!

☞ The control MUST be disconnected from the power supply before carrying out any service work on the control unit or door system. Take measures to ensure that the power supply remains disconnected for the duration of the work.

The CS 320 FU controller is maintenance-free.
The CS 320 FU controller must be checked at least once yearly.

⚠ ATTENTION!

Property damage due to improper checking of the controller!

In order to avoid damage to the controller, drive and door, observe the following points:

- Testing must only be carried out by trained, qualified and authorised persons.
- Worn or faulty parts must be replaced or disposed of correctly.
- Only approved original parts may be installed.
- The test results must be documented in the log book for the door system.

☞ Check all electrical cables and the housing for damage. A defective cable must be replaced immediately.

15. Manufacturer's declaration

Marantec Legden GmbH & Co.KG
Neue Mühle 4
D - 48739 Legden

Declaration of incorporation
in accordance with the Machinery Directive 2006/42/EC for the incorporation of an incomplete machine per Annex II, Part 1B.

Declaration of conformity
in accordance with the directives:
- Electromagnetic Compatibility 2014/30/EU
- RoHs 2011/65/EU

We hereby declare that the product cited below

Product designation: **Door control**
Type designation: **CS 320 FU**

is an incomplete machine intended exclusively for incorporation in a door system and has been developed, designed and produced in accordance with the following directives:

- Machinery Directive 2006/42/EC
- Electromagnetic Compatibility Directive 2014/30/EU
- RoHs Directive 2011/65/EU

Furthermore, it also satisfies the requirements of the Low Voltage Directive 2014/35/EU per Annex I Part 1.5.1 of the Machinery Directive 2006/42/EC.

Applied standards:

EN 12453:2017	Doors - Safety in use of power operated doors: Requirements and test methods
EN 12978	Doors and gates - Safety devices for power-operated doors and gates: Requirements and test methods
EN ISO 13849-1	Safety of machinery - Safety-related parts of control systems - Part 1: General principles for design
EN 60335-1	Safety of household and similar electrical appliances - Part 1: General requirements
EN 60335-2-103	Safety of household and similar electrical appliances - Part 2-103: Particular requirements for drives for gates, doors and windows
EN 61000-6-2	Electromagnetic compatibility (EMC) — Part 6-2: Generic standards – Immunity for industrial environments
EN 61000-6-3	Electromagnetic compatibility (EMC) — Part 6-3: Generic standards — Emitted interference for residential, commercial and light-industrial environments

The relevant technical documentation has been compiled in accordance with Annex VII, part B of the Machinery Directive (2006/42/EC). We undertake to transmit, in response to a reasoned request by the market surveillance authorities, this information in electronic form within a reasonable term.

Person authorised to compile the technical documentation is the signer.

Incomplete machines in accordance with the EC directive 2006/42/EC are only intended for incorporation in other machines or incomplete machines or systems or for combination with them, in order to form a machine with them in accordance with the aforementioned directive. This product must therefore not be put into service until the complete machine / system into which it is incorporated is compliant with the provisions of the aforementioned EC directives.

A change to this product that has not been approved by us results in this declaration losing its validity.

Legden, 01.01.2021

Dirk Wesseling, Management

16. Annex

16.1 Safety circuit measuring points

16.1 / 1

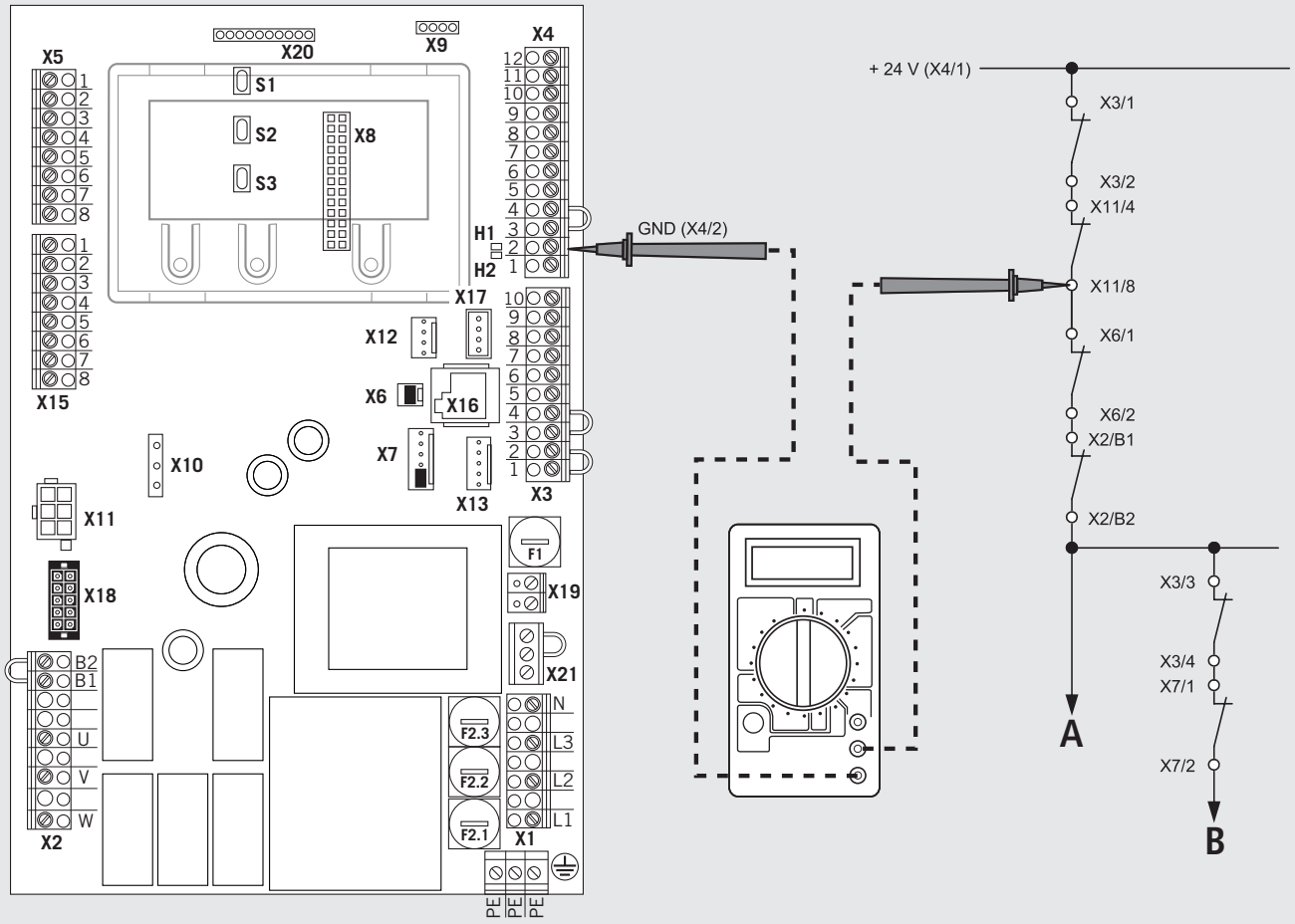

NOTE:

The measuring range must be set for 24 V-DC.

A Emergency stop

B Stop

☞ Measure at all measuring points on the diagram, to locate the interruption.

16.2 Overview of the connections

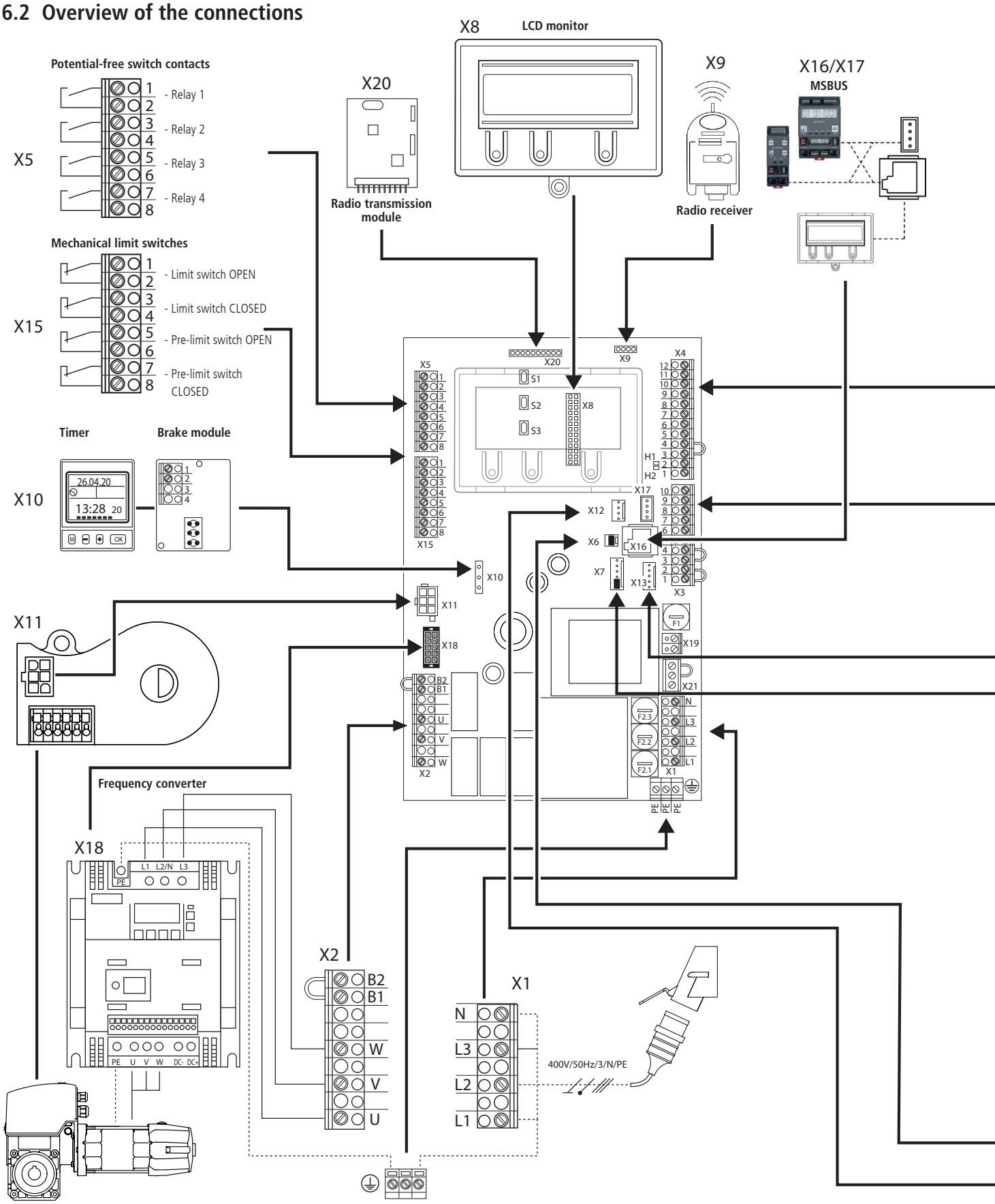

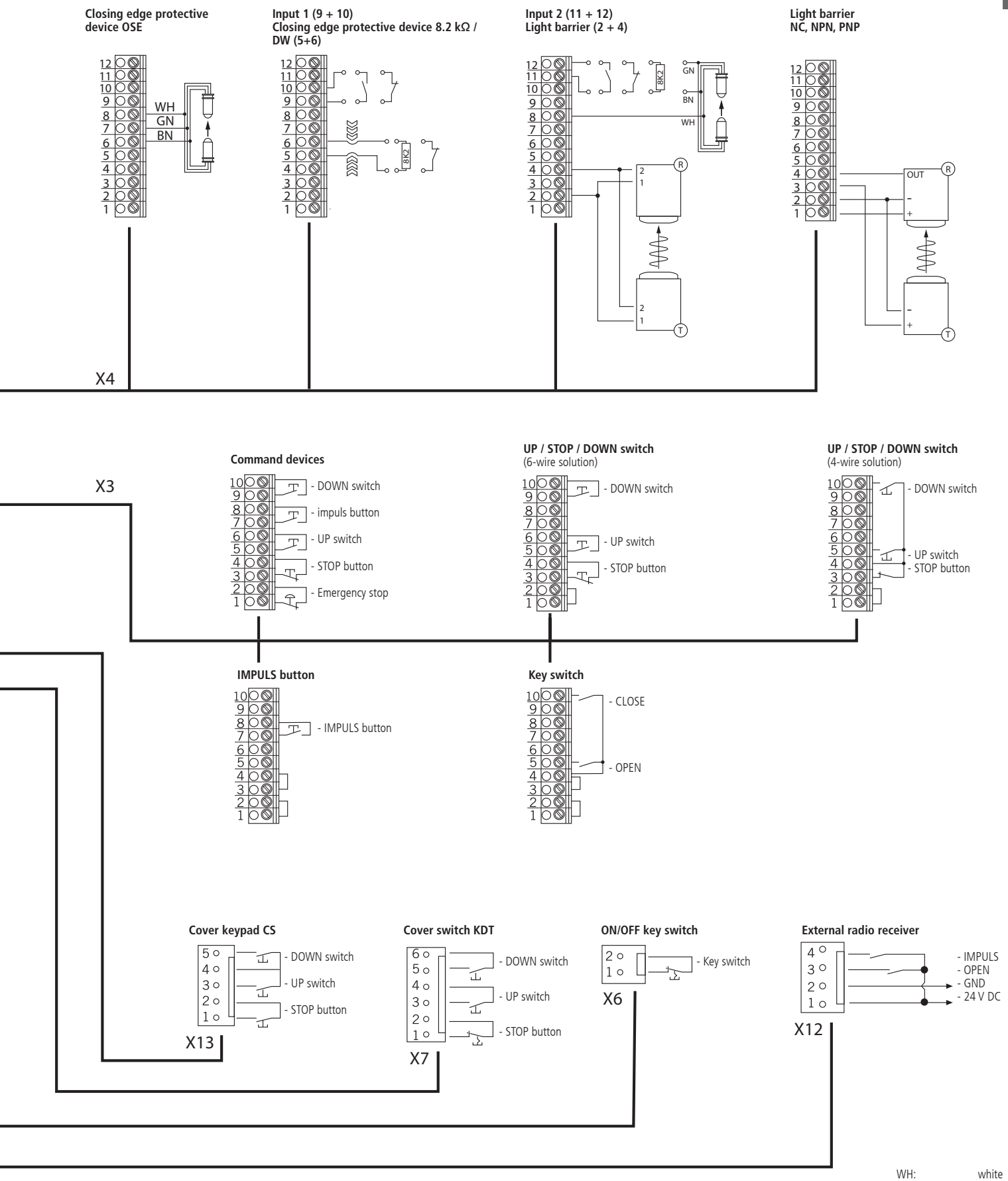

WH: white
GN: green
BN: brown